arc TORCHOLOGY
INTELLIGENT TORCH SOLUTIONS

MAKE WORK
LIFE EASIER

EUROSALD
Welding Technology

DISTRIBUTORE
+39 049 9485180

INTELLIGENT
TORCH SOLUTIONS

ARC T SERIES

A Passion for Technology & Innovation

To produce hand tools that reach the pinnacle of performance, durability and functionality you have to be passionate about what you do.

At Arc Torchology the research and development department is the beating heart of our company.

Every single component is conceived, developed, manufactured and tested in-house.

Our development and testing activities are loaded with cutting edge technologies, many of which have been developed specifically by us to meet the very stringent demands we place on our design solutions.

These specialized, bespoke solutions allow us to develop products that surpass the prerequisite of industry standards, inventing increasingly more beneficial products that deliver maximum results for the operator.

This is not business as usual.

FEATURING NEW TECHNOLOGIES

HZI TECHNOLOGY · FORCE COOL TECHNOLOGY · BI FLOW TECHNOLOGY · TRS TECHNOLOGY

find out more at arctorchology.com

arc TORCHOLOGY INTELLIGENT TORCH SOLUTIONS | MAKE WORK LIFE EASIER

Contents

Range Overview and Ratings	2
Torch Range	
T1 / T1FX New	6
T2 / T2FX	8
T3 / T3FX	10
T1WLT / T1WFXLT Lite New	12
T1W / T1WFX New	14
T3W / T3WFX	16
T4W / T4WFX	18
T5W / T5WFX	20
T5WA Auto New	22
Rapid Fit Connection System	24
Switch Modules	26
Quick Fit Switch Wire Plug Kits	27
Torch Package Configurators	28
Extension Cables	39
Wear Parts	
Set-Up Overview	41
Ceramic Cups	45
Quartz Cups	45
Collets Bodies	46
Gas Lens Bodies	47
Gas Lens Body Filter Kits	48
Starter Kits	
Ceramic Starter Kits	50
Quartz Starter Kits	52
Accessory Kits	
Accessory Kits	54
Super Series System	
Super Series Overview	57
Wear Parts	61
Super Series Accessory Kits	65
Recommended Tungsten Parameters	68

©All rights reserved. No part of this publication maybe reproduced, stored in a retrieval system or transmitted by any means, electronic, mechanical, photocopying or otherwise without the prior permission of Arc Torchology® the copyright holder.

AIR-COOLED

High Performance Tig Series

TECHNICAL SPECIFICATIONS

New

T1/T1FX

Cooling Method		Air-Cooled
Rating:	DC	140A
	AC	100A
Duty Cycle		35%
Electrode Size		1.0-3.2mm/0.04"-1/8"
Operating Temperature		-20°C ..+40°C

Rapid Fit Connector System
Please refer to Page 24

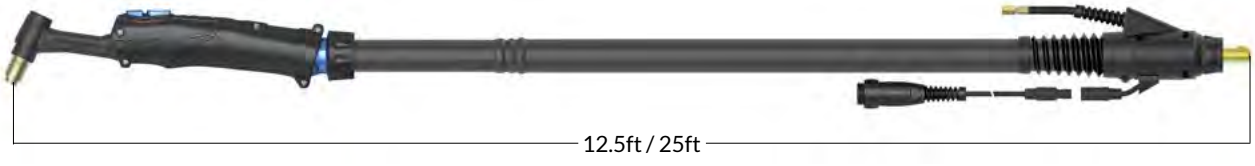

T2/T2FX

Cooling Method		Air-Cooled	
Rating:	DC	190A	180A (FX)
	AC	135A	125A (FX)
Duty Cycle		35%	
Electrode Size		1.0-4.0mm/0.04"-5/32"	
Operating Temperature		-20°C ..+40°C	

T2 Video

Rapid Fit Connector System
Please refer to Page 24

T3/T3FX

Cooling Method		Air-Cooled	
Rating:	DC	240A	220A (FX)
	AC	170A	155A (FX)
Duty Cycle		35%	
Electrode Size		1.0-4.8mm/0.04"-3/16"	
Operating Temperature		-20°C ..+40°C	

Rapid Fit Connector System
Please refer to Page 24

New
T1W SERIES

			T1WLT/T1WFXLT Lite		T1W/T1WFX	
Cooling Method			Liquid-Cooled		Liquid-Cooled	
Length			12.5ft	25ft	12.5ft	25ft
Rating:	DC	1000W	225A	225A	330A	330A
	AC	1000W	160A	160A	230A	230A
	DC	1600W	-	-	-	-
	AC	1600W	-	-	-	-
Duty Cycle			100%	100%	100%	100%
Electrode Size			1.0 - 3.2mm / 0.04"-1/8"		1.0 - 4.0mm / 0.04"-5/32"	
Minimum Liquid Flow Rate			1.0 l/min		1.5 l/min	
Minimum Liquid Inlet Pressure			2.5 Bar		2.5 Bar	
Maximum Liquid Inlet Pressure			5.0 Bar		5.0 Bar	
Maximum Liquid Inlet Temperature			50°C		50°C	
Operating Temperature			-20°C ..+40°C		-20°C ..+40°C	

Rapid Fit Connector System
Please refer to Page 24

T3W/T3WFX

Cooling Method			Liquid-Cooled	
Length			12.5ft	25ft
Rating:	DC	1200W	400A	400A
	AC	1200W	280A	280A
	DC	1600W	-	-
	AC	1600W	-	-
Duty Cycle			100%	60%
Electrode Size			1.0 - 4.0mm / 0.04"-5/32"	
Minimum Liquid Flow Rate			1.5 l/min	
Minimum Liquid Inlet Pressure			2.5 Bar	
Maximum Liquid Inlet Pressure			5.0 Bar	
Maximum Liquid Inlet Temperature			50°C	
Operating Temperature			-20°C ..+40°C	

Rapid Fit Connector System
Please refer to Page 24

T4W/T4WFX

Cooling Method			Liquid-Cooled	
Length			12.5ft	25ft
Rating:	DC	1200W	450A	400A
	AC	1200W	315A	280A
	DC	1600W	450A	450A
	AC	1600W	315A	315A
Duty Cycle			100%	60%
Electrode Size			1.6- 4.8mm / 1/16''-3/16''	
Minimum Liquid Flow Rate			1.5 l/min	
Minimum Liquid Inlet Pressure			2.5 Bar	
Maximum Liquid Inlet Pressure			5.0 Bar	
Maximum Liquid Inlet Temperature			50°C	
Operating Temperature			-20°C ..+40°C	

Rapid Fit Connector System
Please refer to Page 24

T5W/T5WFX

Cooling Method			Liquid-Cooled	
Length			12.5ft	25ft
Rating:	DC	1200W	550A	500A
	AC	1200W	385A	350A
	DC	1600W	550A	550A
	AC	1600W	385A	385A
Duty Cycle			100%	60%
Electrode Size			1.6- 6.4mm / 1/16"-1/4"	
Minimum Liquid Flow Rate			1.5 l/min	
Minimum Liquid Inlet Pressure			2.5 Bar	
Maximum Liquid Inlet Pressure			5.0 Bar	
Maximum Liquid Inlet Temperature			50°C	
Operating Temperature			-20°C ..+40°C	

T5W Video

Rapid Fit Connector System
Please refer to Page 24

New
T5WA Auto

Cooling Method			Liquid-Cooled	
Length			12.5ft	25ft
Rating:	DC	1200W	550A	450A
	AC	1200W	385A	315A
	DC	1600W	550A	450A
	AC	1600W	385A	315A
Duty Cycle			100%	100%
Electrode Size			1.6- 6.4mm / 1/16"-1/4"	
Minimum Liquid Flow Rate			1.5 l/min	
Minimum Liquid Inlet Pressure			2.5 Bar	
Maximum Liquid Inlet Pressure			5.0 Bar	
Maximum Liquid Inlet Temperature			50°C	
Operating Temperature			-20°C ..+40°C	

Handle Dimension

Rapid Fit Connector System
Please refer to Page 24

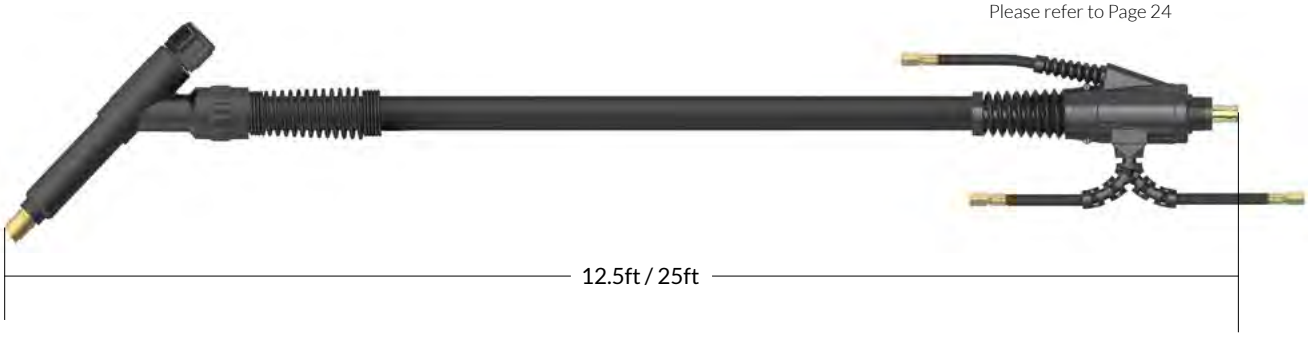

New

T1 / T1FX Air-Cooled Tig Welding Torch

Ratings:	140A DC, 100A AC @35% duty cycle. 1.0 to 3.2mm Electrode

The Arc T1 is the smallest Air-Cooled Tig torch in the range.
At 140 Amps DC it has 15% more power than a WP9.

ARC T HIGH PERFORMANCE TIG TORCH PACKAGES

Arc Tig Torches are supplied with a momentary switch and Surelok™ 35-50mm Dinse style termination as standard.

For alternate terminations, gas fittings, and switch options please refer to the Torch Configurators - pages 28-38.

12.5ft	25ft
T1-S1-4M-SL-QGS1	T1-S1-8M-SL-QGS1
T1FX-S1-4M-SL-QGS1	T1FX-S1-8M-SL-QGS1

Wear Parts

A Standard Ceramic Cups

Part Number	Description	Nozzle	Bore Size
T1CC04	Ceramic Cup	#4	6mm - 1/4"
T1CC05	Ceramic Cup	#5	8mm - 5/16"
T1CC06	Ceramic Cup	#6	10mm - 3/8"
T1CC07	Ceramic Cup	#7	11mm - 7/16"
T1CC08	Ceramic Cup	#8	12.5mm - 1/2"
T1CC10	Ceramic Cup	#10	15mm - 5/8"

B Short Ceramic Cup

Part Number	Description	Nozzle	Bore Size
T1CC05S	Short Ceramic Cup	#5	8mm - 5/16"
T1CC07S	Short Ceramic Cup	#7	11mm - 7/16"
T1CC10S	Short Ceramic Cup	#10	15mm - 5/8"

C Standard Quartz Cups

Part Number	Description	Nozzle	Bore Size
T1QZ06	Standard Quartz Cup	#6	10mm - 3/8"
T1QZ08	Standard Quartz Cup	#8	12mm - 1/2"
T1QZ10	Standard Quartz Cup	#10	15mm - 5/8"

D Collet Body

Part Number	Description	Bore Size
T1CB10	Collet Body	1.0mm - 0.04"
T1CB16	Collet Body	1.6mm - 1/16"
T1CB20	Collet Body	2.0mm - 5/64"
T1CB24	Collet Body	2.4mm - 3/32"
T1CB32	Collet Body	3.2mm - 1/8"

E Gas Lens Collet Body

Part Number	Description	Bore Size
T1GL10	Gas Lens Collet Body	1.0mm - 0.04"
T1GL16	Gas Lens Collet Body	1.6mm - 1/16"
T1GL20	Gas Lens Collet Body	2.0mm - 5/64"
T1GL24	Gas Lens Collet Body	2.4mm - 3/32"
T1GL32	Gas Lens Collet Body	3.2mm - 1/8"

To set-up your Arc Tig Torch please add the relevant starter kit.

Please refer to Page 50.

HIGH PERFORMANCE SERIES

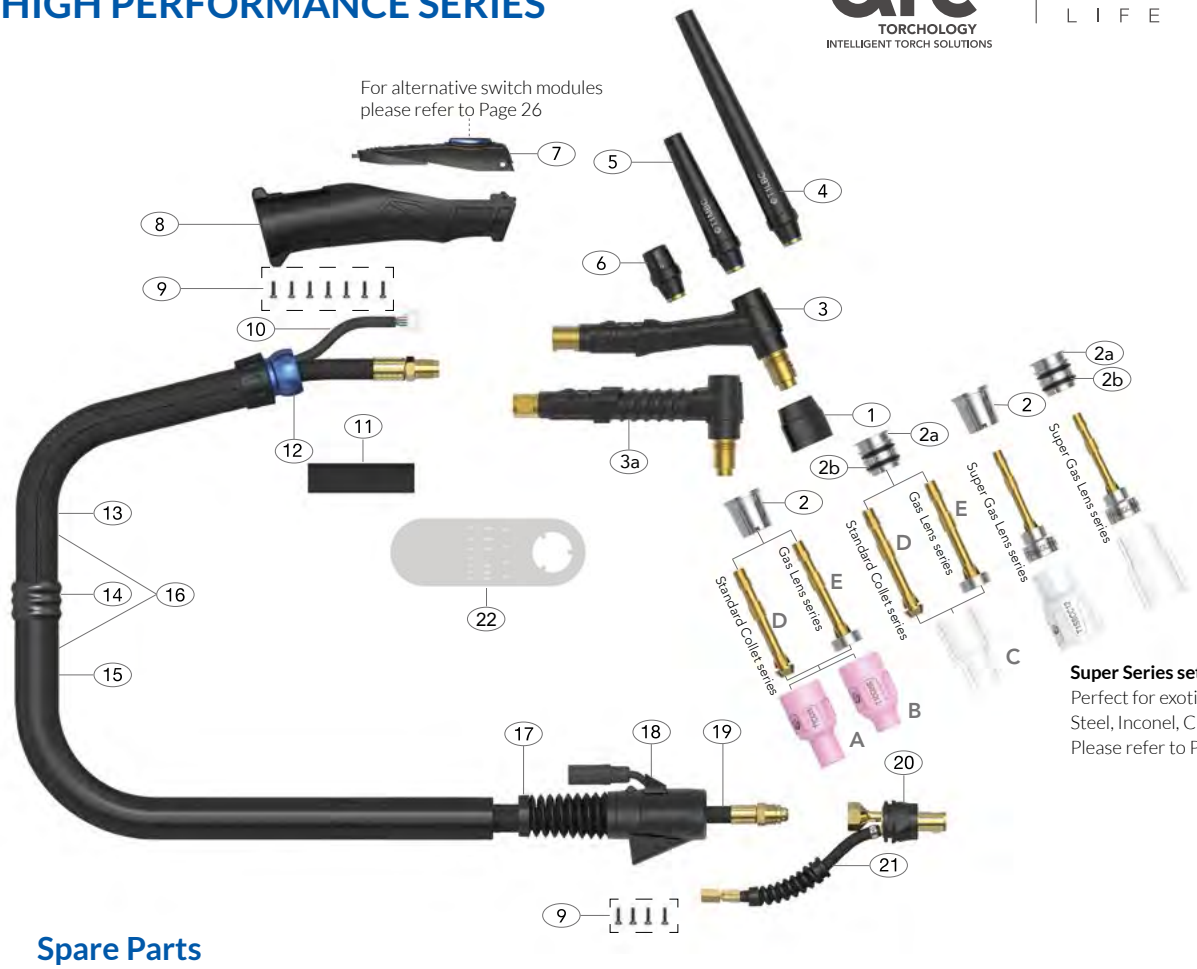

Super Series set-up
Perfect for exotic metals, Stainless Steel, Inconel, Chromoly & Titanium
Please refer to Page 57

Spare Parts

	Part Number	Description
1	T1GS	Head Gasket
2	T1SN	Heat Zone Isolator
2a	T1QZSN18	Quartz Heat Zone Isolator
2b	QZR-D18	Special Seal Ring
3	AT1401	T1 Torch Body Air-Cooled
3a	AT1401F	T1FX Flexible Torch Body Air-Cooled
4	T1LBC	Long Back Cap
5	T1MBC	Medium Back Cap
6	T1SBC	Short Back Cap
*7	ATER1MS	Momentary Switch Kit
8	ATERH100	Arc Handle Kit
9	ATPB2.6x8PB	Screw Pack
10	ATERSWL4	Trigger Lead 12.5ft
	ATERSWL8	Trigger Lead 25ft
11	ATHS18MM-90	Heat Shrink Tube
12	ATERKJ100	Small Knuckle Joint
13	ATERLC100-08	Leather Cover x 0.8mt
14	ATERJK100	Joint Repair Kit
15	ATERNCS-32	Neoprene Cover Assembly x 3.2m/10.5ft
	ATERNCS-72	Neoprene Cover Assembly x 7.2m/23.7ft

	Part Number	Description
16	ATERCO100-40	Sheath x 12.5ft Inc Leather Cover
	ATERCO100-80	Sheath x 25ft Inc Leather Cover
17	ATSLH917-S	Cable Support Small
18	ATSLH917-H	Surelok™ Housing Small
19	AT1420-4M-OB	Power Cable x 12.5ft Surelok™ O/B Rubber
	AT1420-8M-OB	Power Cable x 25ft Surelok™ O/B Rubber
20	ATSL3550	Surelok™ Body & Support
21	ATNSLOB-1-QGS#	Gas Supply Hose O/B
22	AT-SP-S	Spanner Small

Gas supply hoses are specified by utilizing the part number and a termation suffix from the gas supply hose table on Page 24.

Example: ATNSLOB01-QGS1
Gas Supply Hose Rapid Fit c/w 3/8"BSP

T2 / T2FX Air-Cooled Tig Welding Torch

Ratings:	T2: 190A DC, 135A AC @35% duty cycle. 1.0 to 4.0mm Electrode T2FX: 180A DC, 125A AC @35% duty cycle. 1.0 to 4.0mm Electrode

The Arc T2 is the same size as a WP17 with better performance than a WP26. Its unique consumable design make it a reliable all-day Industrial level Air-Cooled Torch.

T2 Video

ARC T HIGH PERFORMANCE TIG TORCH PACKAGES

Arc Tig Torches are supplied with a momentary switch and Surelok™ 35-50mm Dinse style termination as standard.

For alternate terminations, gas fittings, and switch options please refer to the Torch Configurators - pages 28-38.

12.5ft	25ft
T2-S1-4M-SL-QGS1	T2-S1-8M-SL-QGS1
T2FX-S1-4M-SL-QGS1	T2FX-S1-8M-SL-QGS1

Wear Parts

A Standard Ceramic Cups

Part Number	Description	Nozzle	Bore Size
T2CC04	Ceramic Cup	#4	6mm - 1/4"
T2CC05	Ceramic Cup	#5	8mm - 5/16"
T2CC06	Ceramic Cup	#6	10mm - 3/8"
T2CC07	Ceramic Cup	#7	11mm - 7/16"
T2CC08	Ceramic Cup	#8	12.5mm - 1/2"
T2CC10	Ceramic Cup	#10	16mm - 5/8"

B Standard Quartz Cups

Part Number	Description	Nozzle	Bore Size
T2QZ06	Standard Quartz Cup	#6	10mm - 3/8"
T2QZ08	Standard Quartz Cup	#8	12mm - 1/2"
T2QZ10	Standard Quartz Cup	#10	15mm - 5/8"

C Collet Body

Part Number	Description	Bore Size
T2CB10	Collet Body	1.0mm - 0.04"
T2CB16	Collet Body	1.6mm - 1/16"
T2CB20	Collet Body	2.0mm - 5/64"
T2CB24	Collet Body	2.4mm - 3/32"
T2CB32	Collet Body	3.2mm - 1/8"
T2CB40	Collet Body	4.0mm - 5/32"

D Gas Lens Collet Body

Part Number	Description	Bore Size
T2GL10	Gas Lens Collet Body	1.0mm - 0.04"
T2GL16	Gas Lens Collet Body	1.6mm - 1/16"
T2GL20	Gas Lens Collet Body	2.0mm - 5/64"
T2GL24	Gas Lens Collet Body	2.4mm - 3/32"
T2GL32	Gas Lens Collet Body	3.2mm - 1/8"
T2GL40	Gas Lens Collet Body	4.0mm - 5/32"

To set-up your Arc Tig Torch please add the relevant starter kit.

Please refer to Page 50.

High Performance Ceramics Available

Withstands extreme temperatures up to 1950°C without any risk of cracking or burning.

Please refer to Page 45

HIGH PERFORMANCE SERIES

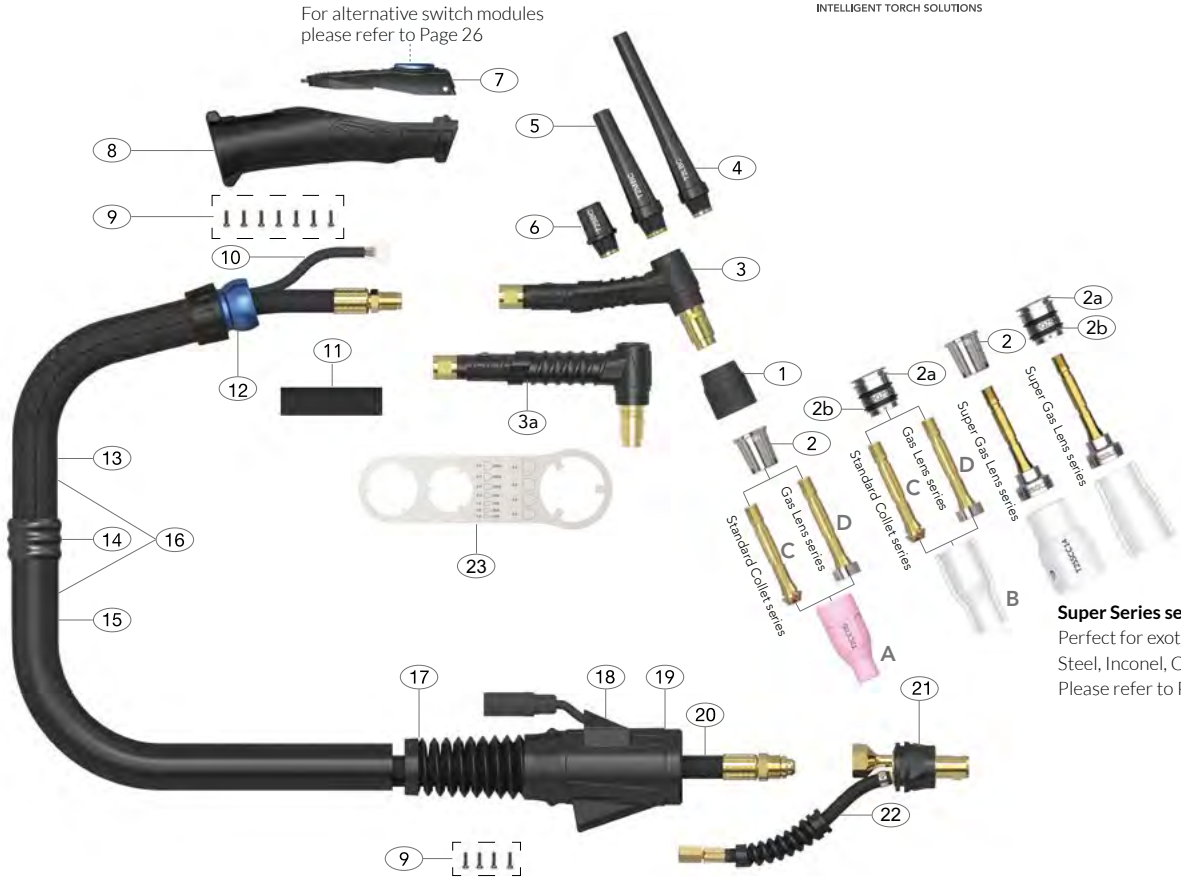

Super Series set-up
Perfect for exotic metals, Stainless Steel, Inconel, Chromoly & Titanium
Please refer to Page 58

Spare Parts

	Part Number	Description
1	T2GS	Head Gasket
2	T2SN	Heat Zone Isolator
2a	T2QZSN20	Quartz Heat Zone Isolator
2b	QZR-D20	Special Seal Ring
3	AT1501	T2 Torch Body Air-Cooled
3a	AT1501F	T2FX Flexible Torch Body Air-Cooled
4	T2LBC	Long Back Cap
5	T2MBC	Medium Back Cap
6	T2SBC	Short Back Cap
*7	ATER1MS	Momentary Switch Kit
8	ATERH100	Arc Handle Kit
9	ATPB2.6x8PB	Screw Pack
10	ATERSWL4	Trigger Lead 12.5ft
	ATERSWL8	Trigger Lead 25ft
11	ATHS18MM-90	Heat Shrink Tube
12	ATERKJ200	Knuckle Joint
13	ATERLC200-08	Leather Cover x 0.8mt
14	ATERJK200	Joint Repair Kit
15	ATERNCM-32	Neoprene Cover Assembly x 3.2m/10.5ft
	ATERNCM-72	Neoprene Cover Assembly x 7.2m/23.7ft

	Part Number	Description
16	ATERCO150-40	Sheath x 12.5ft Inc Leather Cover
	ATERCO150-80	Sheath x 25ft Inc Leather Cover
17	ATSLH26-S	Cable Support Large
18	ATSLH26-C	Surelok™ Housing Cover
19	ATSLH26-H	Surelok™ Housing Large
20	AT2120-4M-OB	Power Cable x 12.5ft Surelok™ O/B Rubber
	AT2120-8M-OB	Power Cable x 25ft Surelok™ O/B Rubber
21	ATSL3550	Surelok™ Body & Support
22	ATNSLOB-1-QGS#	Gas Supply Hose O/B
23	AT-SP	Spanner

Gas supply hoses are specified by utilizing the part number and a termation suffix from the gas supply hose table on Page 24.

Example: ATNSLOB01-QGS1
Gas Supply Hose Rapid Fit c/w 3/8"BSP

T3 / T3FX Air-Cooled Tig Welding Torch

Ratings:	T3: 240A DC, 170A AC @35% duty cycle. 1.0 to 4.8mm Electrode T3FX: 220A DC, 155A AC @35% duty cycle. 1.0 to 4.8mm Electrode

The World's most powerful Air-Cooled Tig torch.
The T3 has 35% more power than a WP26 from the same size footprint and is suitable for AC processes normally requiring Liquid-Cooled torches.

ARC T HIGH PERFORMANCE TIG TORCH PACKAGES

Arc Tig Torches are supplied with a momentary switch and Surelok™ 35-50mm Dinse style termination as standard.

For alternate terminations, gas fittings, and switch options please refer to the Torch Configurators - pages 28-38.

12.5ft	25ft
T3-S1-4M-SL-QGS1	T3-S1-8M-SL-QGS1
T3FX-S1-4M-SL-QGS1	T3FX-S1-8M-SL-QGS1

Wear Parts

A Standard Ceramic Cups

Part Number	Description	Nozzle	Bore Size
T3CC04	Ceramic Cup	#4	6mm - 1/4"
T3CC05	Ceramic Cup	#5	8mm - 5/16"
T3CC06	Ceramic Cup	#6	10mm - 3/8"
T3CC07	Ceramic Cup	#7	11mm - 7/16"
T3CC08	Ceramic Cup	#8	12.5mm - 1/2"
T3CC10	Ceramic Cup	#10	16mm - 5/8"

B Large Gas Lens Ceramic Cups

Part Number	Description	Nozzle	Bore Size
T5LGLCC08	Large Gas Lens Ceramic Cup	#8	12.5mm - 1/2"
T5LGLCC10	Large Gas Lens Ceramic Cup	#10	16mm - 5/8"
T5LGLCC12	Large Gas Lens Ceramic Cup	#12	19mm - 3/4"

C Collet Body

Part Number	Description	Bore Size
T3CB10	Collet Body	1.0mm - 0.04"
T3CB16	Collet Body	1.6mm - 1/16"
T3CB20	Collet Body	2.0mm - 5/64"
T3CB24	Collet Body	2.4mm - 3/32"
T3CB32	Collet Body	3.2mm - 1/8"
T3CB40	Collet Body	4.0mm - 5/32"
T3CB48	Collet Body	4.8mm - 3/16"

D Standard Quartz Cups

Part Number	Description	Nozzle	Bore Size
T3QZ06	Standard Quartz Cup	#6	10mm - 3/8"
T3QZ08	Standard Quartz Cup	#8	12mm - 1/2"
T3QZ10	Standard Quartz Cup	#10	15mm - 5/8"
T3QZ12	Standard Quartz Cup	#12	20mm - 3/4"

E Gas Lens Collet Body

Part Number	Description	Bore Size
T3GL10	Gas Lens Collet Body	1.0mm - 0.04"
T3GL16	Gas Lens Collet Body	1.6mm - 1/16"
T3GL20	Gas Lens Collet Body	2.0mm - 5/64"
T3GL24	Gas Lens Collet Body	2.4mm - 3/32"
T3GL32	Gas Lens Collet Body	3.2mm - 1/8"
T3GL40	Gas Lens Collet Body	4.0mm - 5/32"
T3GL48	Gas Lens Collet Body	4.8mm 3/16"

F Large Gas Lens Collet Body

Part Number	Description	Bore Size
T5LGL10	Large Gas Lens Collet Body	1.0mm - 0.04"
T5LGL16	Large Gas Lens Collet Body	1.6mm - 1/16"
T5LGL20	Large Gas Lens Collet Body	2.0mm - 5/64"
T5LGL24	Large Gas Lens Collet Body	2.4mm - 3/32"
T5LGL32	Large Gas Lens Collet Body	3.2mm - 1/8"
T5LGL40	Large Gas Lens Collet Body	4.0mm - 5/32"
T5LGL48	Large Gas Lens Collet Body	4.8mm - 3/16"

To set-up your Arc Tig Torch please add the relevant starter kit.
Please refer to Page 50.

HIGH PERFORMANCE SERIES

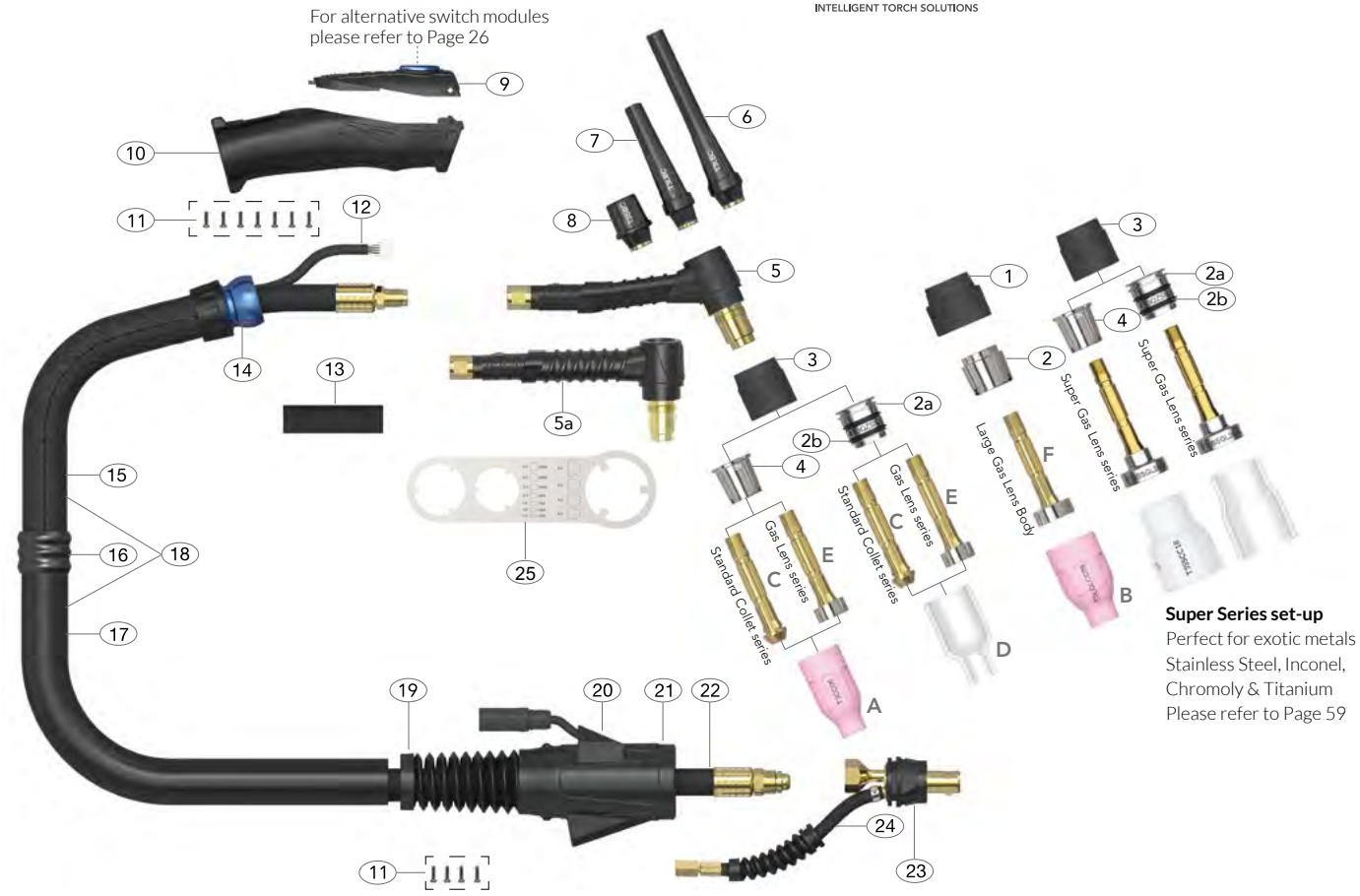

Super Series set-up
Perfect for exotic metals
Stainless Steel, Inconel, Chromoly & Titanium
Please refer to Page 59

Spare Parts

	Part Number	Description
1	T3LGS	Large Head Gasket
2	T3LSN	Large Heat Zone Isolator
2a	T3QZSN23	Quartz Heat Zone Isolator
2b	QZR-D23	Special Seal Ring
3	T3GS	Head Gasket
4	T3SN	Heat Zone Isolator
5	AT2601	T3 Torch Body Air-Cooled
5a	AT2601F	T3FX Flexible Torch Body Air-Cooled
6	T3LBC	Long Back Cap
7	T3MBC	Medium Back Cap
8	T3SBC	Short Back Cap
*9	ATER1MS	Momentary Switch Kit
10	ATERH200	Arc Handle Kit
11	ATPB2.6x8PB	Screw Pack
12	ATERSWL4	Trigger Lead 12.5ft
	ATERSWL8	Trigger Lead 25ft
13	ATHS18MM-90	Heat Shrink Tube
14	ATERKJ200	Knuckle Joint
15	ATERLC200-08	Leather Cover x 0.8mt
16	ATERJK200	Joint Repair Kit
17	ATERNCM-32	Neoprene Cover Assembly x 3.2m/10.5ft
	ATERNCM-72	Neoprene Cover Assembly x 7.2m/23.7ft

	Part Number	Description
18	ATERCO150-40	Sheath x 12.5ft Inc Leather Cover
	ATERCO150-80	Sheath x 25ft Inc Leather Cover
19	ATSLH26-S	Cable Support Large
20	ATSLH26-C	Surelok™ Housing Cover
21	ATSLH26-H	Surelok™ Housing Large
22	AT2620-4M-OB	Power Cable x 12.5ft Surelok™ O/B Rubber
	AT2620-8M-OB	Power Cable x 25ft Surelok™ O/B Rubber
23	ATSL3550	Surelok™ Body & Support
24	ATNSLOB-1-QGS#	Gas Supply Hose O/B
25	AT-SP	Spanner

Gas supply hoses are specified by utilizing the part number and a termation suffix from the gas supply hose table on Page 24.

Example: ATNSLOB01-QGS1
Gas Supply Hose Rapid Fit c/w 3/8"BSP

High Performance Ceramics Available

Withstands extreme temperatures up to 1950°C without any risk of cracking or burning.
Please refer to Page 45

New

T1WLT / T1WFXLT Lite Liquid-Cooled Tig Welding Torch

Ratings:	225A DC, 160A AC @ 100% duty cycle, 1.0 to 3.2mm Electrode

The Arc T1WLT is 30% lighter than a T1W, with comparable power output to the WP20 while substantially extending the lifespan of its wear parts.

ARC T HIGH PERFORMANCE TIG TORCH PACKAGES

Arc Tig Torches are supplied with a momentary switch and Surelok™ 35-50mm Dinse-style termination as standard.

For alternate terminations, gas and water fittings, and switch options please refer to the Torch Configurators - pages 28-38.

12.5ft	25ft
T1WLT-S1-4M-SL-QWF1-QWR1-QGS1	**T1WLT-S1-8M-SL-QWF1-QWR1-QGS1**
T1WFXLT-S1-4M-SL-QWF1-QWR1-QGS1	**T1WFXLT-S1-8M-SL-QWF1-QWR1-QGS1**

Wear Parts

A Standard Ceramic Cups

Part Number	Description	Nozzle	Bore Size
T1CC04	Ceramic Cup	#4	6mm - 1/4"
T1CC05	Ceramic Cup	#5	8mm - 5/16"
T1CC06	Ceramic Cup	#6	10mm - 3/8"
T1CC07	Ceramic Cup	#7	11mm - 7/16"
T1CC08	Ceramic Cup	#8	12.5mm - 1/2"
T1CC10	Ceramic Cup	#10	16mm - 5/8"

B Short Ceramic Cup

Part Number	Description	Nozzle	Bore Size
T1CC05S	Short Ceramic Cup	#5	8mm - 5/16"
T1CC07S	Short Ceramic Cup	#7	11mm - 7/16"
T1CC10S	Short Ceramic Cup	#10	15mm - 5/8"

C Standard Quartz Cups

Part Number	Description	Nozzle	Bore Size
T1QZ06	Standard Quartz Cup	#6	10mm - 3/8"
T1QZ08	Standard Quartz Cup	#8	12mm - 1/2"
T1QZ10	Standard Quartz Cup	#10	15mm - 5/8"

D Collet Body

Part Number	Description	Bore Size
T1CB10	Collet Body	1.0mm - 0.04"
T1CB16	Collet Body	1.6mm - 1/16"
T1CB20	Collet Body	2.0mm - 5/64"
T1CB24	Collet Body	2.4mm - 3/32"
T1CB32	Collet Body	3.2mm - 1/8"

E Gas Lens Collet Body

Part Number	Description	Bore Size
T1GL10	Gas Lens Collet Body	1.0mm - 0.04"
T1GL16	Gas Lens Collet Body	1.6mm - 1/16"
T1GL20	Gas Lens Collet Body	2.0mm - 5/64"
T1GL24	Gas Lens Collet Body	2.4mm - 3/32"
T1GL32	Gas Lens Collet Body	3.2mm - 1/8"

To set-up your Arc Tig Torch please add the relevant starter kit.

Please refer to Page 50.

HIGH PERFORMANCE SERIES

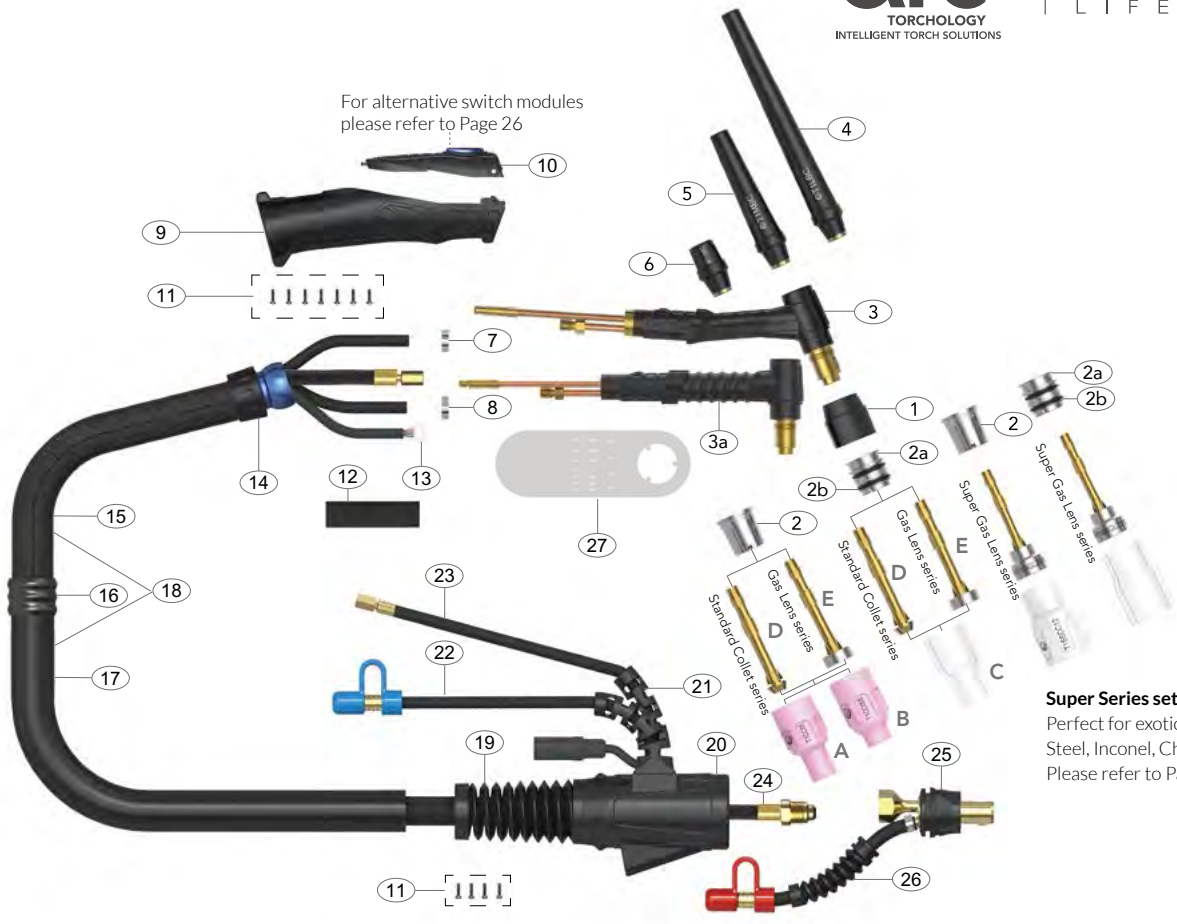

Super Series set-up
Perfect for exotic metals, Stainless Steel, Inconel, Chromoly & Titanium
Please refer to Page 57

Spare Parts

	Part Number	Description
1	T1GS	Head Gasket
2	T1SN	Heat Zone Isolator
2a	T1QZSN18	Quartz Heat Zone Isolator
2b	QZR-D18	Special Seal Ring
3	AT3501	T1W Torch Body Liquid-Cooled
3a	AT3501F	T1WFX Flexible Torch Body
4	T1LBC	Long Back Cap
5	T1MBC	Medium Back Cap
6	T1SBC	Short Back Cap
7	15400022	Water Hose Clamp 9.5mm
8	15400020	Gas Hose Clamp 8.7mm
9	ATERH100	Arc Handle Kit
*10	ATER1MS	Momentary Switch Kit
11	ATPB2.6x8PB	Screw Pack
12	ATHS22MM-130	Heat Shrink Tube
13	ATERSWL4	Trigger Lead 12.5ft
	ATERSWL8	Trigger Lead 25ft
14	ATERKJ100	Knuckle Joint
15	ATERLC150-08	Leather Cover x 0.8mt
16	ATERJK200	Joint Repair Kit
17	ATERNCM-32	Neoprene Cover Assembly x 3.2m/10.5ft
	ATERNCM-72	Neoprene Cover Assembly x 7.2m/23.7ft
18	ATERCO150S-40	Sheath x 12.5ft Inc Leather Cover
	ATERCO150S-80	Sheath x 25ft Inc Leather Cover

	Part Number	Description
19	ATSLH26-S	Cable Support Large
20	ATSLH26-H	Surelok™ Housing Large
21	ATSLH1820-S	Surelok™ Housing Support
22	AT45V07OB-QWF#	Water Feed Hose x 12.5ft O/B Rubber
	AT45V08OB-QWF#	Water Feed Hose x 25ft O/B Rubber
23	ATN45V09OB-QGS#	Gas Supply Hose x 12.5ft O/B Rubber
	ATN45V10OB-QGS#	Gas Supply Hose x 25ft O/B Rubber
24	SLHD45V03AOB	Power Cable x 12.5ft Surelok™ O/B Rubber
	SLHD45V04AOB	Power Cable x 25ft Surelok™ O/B Rubber
25	ATSL3550	Surelok™ Body & Support
26	ATNSLOB-1-QWR#	Water Return Hose O/B
27	AT-SP-S	Spanner Small

Water feed and gas supply hoses are specified by utilizing the part number and a termination suffix from the water feed and gas supply hose table on Page 24.

Example: AT45V07OB-QWF1
Water Feed Hose Rapid Fit x 12.5ft c/w 8.9mm Quick Fit

Example: ATN45V07OB-QGS4
Gas Supply Hose Rapid Fit x 12.5ft c/w 8.9mm Quick Fit

T1W / T1WFX New Liquid-Cooled Tig Welding Torch

Ratings:	330A DC, 230A AC @ 100% duty cycle, 1.0 to 4.0mm Electrode

The Arc T1W will outperform the WP20 and is the smallest Liquid-Cooled Arc Tig torch in the series. Rated at 330 Amps it has 40% more power than a WP20.

ARC T HIGH PERFORMANCE TIG TORCH PACKAGES

Arc Tig Torches are supplied with a momentary switch and Surelok™ 35-50mm Dinse - style termination as standard.

For alternate terminations, gas and water fittings, and switch options please refer to the Torch Configurators - pages 28-38.

12.5ft	25ft
T1W-S1-4M-SL-QWF1-QWR1-QGS1	**T1W-S1-8M-SL-QWF1-QWR1-QGS1**
T1WFX-S1-4M-SL-QWF1-QWR1-QGS1	**T1WFX-S1-8M-SL-QWF1-QWR1-QGS1**

Wear Parts

A Standard Ceramic Cups

Part Number	Description	Nozzle	Bore Size
T1CC04	Ceramic Cup	#4	6mm - 1/4"
T1CC05	Ceramic Cup	#5	8mm - 5/16"
T1CC06	Ceramic Cup	#6	10mm - 3/8"
T1CC07	Ceramic Cup	#7	11mm - 7/16"
T1CC08	Ceramic Cup	#8	12.5mm - 1/2"
T1CC10	Ceramic Cup	#10	16mm - 5/8"

B Short Ceramic Cup

Part Number	Description	Nozzle	Bore Size
T1CC05S	Short Ceramic Cup	#5	8mm - 5/16"
T1CC07S	Short Ceramic Cup	#7	11mm - 7/16"
T1CC10S	Short Ceramic Cup	#10	15mm - 5/8"

C Standard Quartz Cups

Part Number	Description	Nozzle	Bore Size
T1QZ06	Standard Quartz Cup	#6	10mm - 3/8"
T1QZ08	Standard Quartz Cup	#8	12mm - 1/2"
T1QZ10	Standard Quartz Cup	#10	15mm - 5/8"

D Collet Body

Part Number	Description	Bore Size
T1CB10	Collet Body	1.0mm - 0.04"
T1CB16	Collet Body	1.6mm - 1/16"
T1CB20	Collet Body	2.0mm - 5/64"
T1CB24	Collet Body	2.4mm - 3/32"
T1CB32	Collet Body	3.2mm - 1/8"
T1CB40	Collet Body	4.0mm - 5/32"

E Gas Lens Collet Body

Part Number	Description	Bore Size
T1GL10	Gas Lens Collet Body	1.0mm - 0.04"
T1GL16	Gas Lens Collet Body	1.6mm - 1/16"
T1GL20	Gas Lens Collet Body	2.0mm - 5/64"
T1GL24	Gas Lens Collet Body	2.4mm - 3/32"
T1GL32	Gas Lens Collet Body	3.2mm - 1/8"
T1GL40	Gas Lens Collet Body	4.0mm - 5/32"

To set-up your Arc Tig Torch please add the relevant starter kit.

Please refer to Page 50.

HIGH PERFORMANCE SERIES

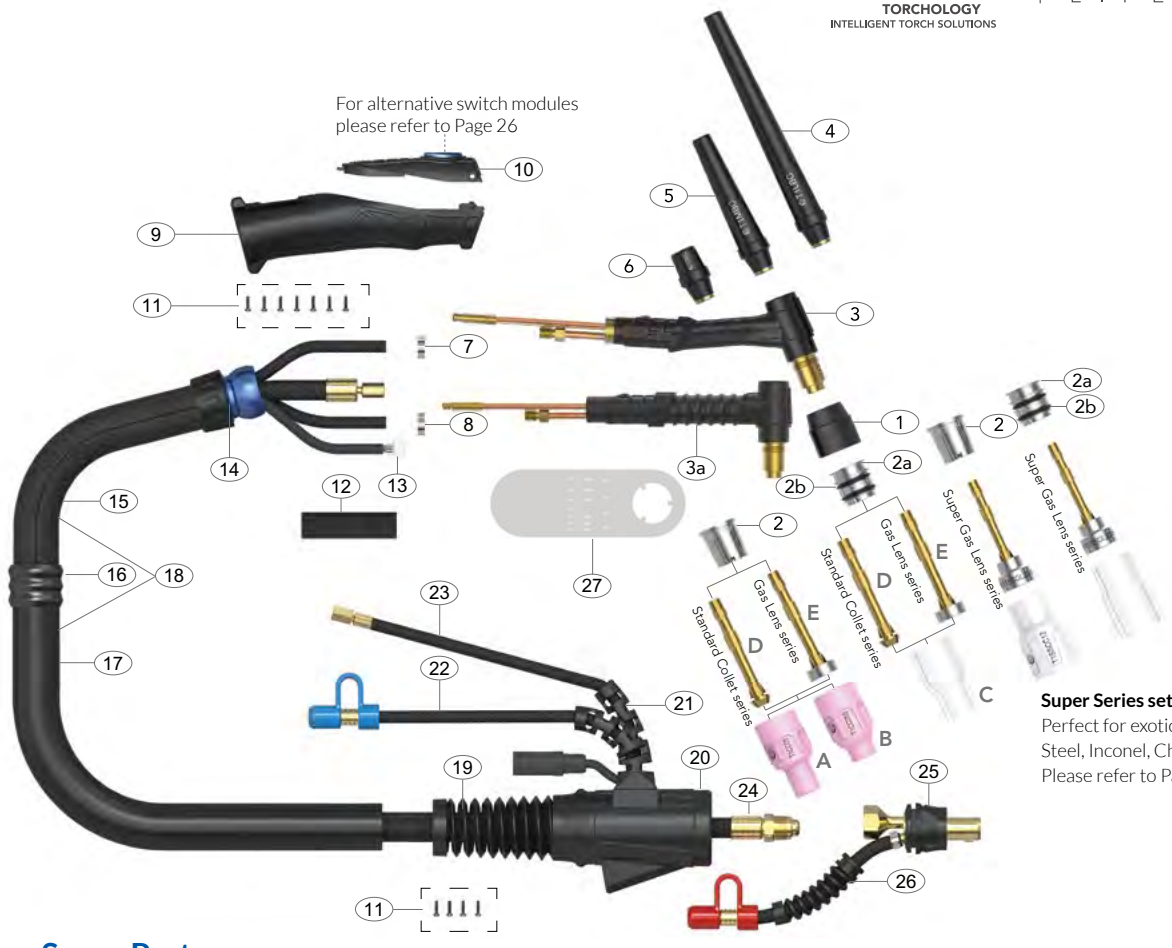

Super Series set-up
Perfect for exotic metals, Stainless Steel, Inconel, Chromoly & Titanium
Please refer to Page 57

Spare Parts

	Part Number	Description
1	T1GS	Head Gasket
2	T1SN	Heat Zone Isolator
2a	T1QZSN18	Quartz Heat Zone Isolator
2b	QZR-D18	Special Seal Ring
3	AT3501	T1W Torch Body Liquid-Cooled
3a	AT3501F	T1WFX Flexible Torch Body
4	T1LBC	Long Back Cap
5	T1MBC	Medium Back Cap
6	T1SBC	Short Back Cap
7	15400022	Water Hose Clamp 9.5mm
8	15400020	Gas Hose Clamp 8.7mm
9	ATERH100	Arc Handle Kit
* 10	ATER1MS	Momentary Switch Kit
11	ATPB2.6x8PB	Screw Pack
12	ATHS22MM-130	Heat Shrink Tube
13	ATERSWL4	Trigger Lead 12.5ft
	ATERSWL8	Trigger Lead 25ft
14	ATERKJ200	Knuckle Joint
15	ATERLC200-08	Leather Cover x 0.8mt
16	ATERJK200	Joint Repair Kit
17	ATERNCL-32	Neoprene Cover Assembly x 3.2m/10.5ft
	ATERNCL-72	Neoprene Cover Assembly x 7.2m/23.7ft
18	ATERCO200-40	Sheath x 12.5ft Inc Leather Cover
	ATERCO200-80	Sheath x 25ft Inc Leather Cover

	Part Number	Description
19	ATSLH26-S	Cable Support Large
20	ATSLH26-H	Surelok™ Housing Large
21	ATSLH1820-S	Surelok™ Housing Support
22	AT45V07OB-QWF#	Water Feed Hose x 12.5ft O/B Rubber
	AT45V08OB-QWF#	Water Feed Hose x 25ft O/B Rubber
23	ATN45V09OB-QGS#	Gas Supply Hose x 12.5ft O/B Rubber
	ATN45V10OB-QGS#	Gas Supply Hose x 25ft O/B Rubber
24	AT3320-4M-OB	Power Cable x 12.5ft Surelok™ O/B Rubber
	AT3320-8M-OB	Power Cable x 25ft Surelok™ O/B Rubber
25	ATSL3550	Surelok™ Body & Support
26	ATNSLOB-1-QWR#	Water Return Hose O/B
27	AT-SP-S	Spanner Small

Water feed and gas supply hoses are specified by utilizing the part number and a termination suffix from the water feed and gas supply hose table on Page 24.

Example: AT45V07OB-QWF1
Water Feed Hose Rapid Fit x 12.5ft c/w 8.9mm Quick Fit

Example: ATN45V07OB-QGS4
Gas Supply Hose Rapid Fit x 12.5ft c/w 8.9mm Quick Fit

T3W / T3WFX Liquid-Cooled Tig Welding Torch

Ratings:	T3W: 400A DC, 280A AC @ 100% duty cycle, 1.0 to 4.0mm Electrode T3WFX: 400A DC, 280A AC @ 60% duty cycle, 1.0 to 4.0mm Electrode

With a smaller footprint than a WP17, the T3W has more power than a WP18 and is suitable for the majority of Industrial applications and material types.

ARC T HIGH PERFORMANCE TIG TORCH PACKAGES

Arc Tig Torches are supplied with a momentary switch and Surelok™ 35-50mm Dinse style termination as standard.

For alternate terminations, gas and water fittings, and switch options please refer to the Torch Configurators - pages 28-38.

12.5ft	25ft
T3W-S1-4M-SL-QWF1-QWR1-QGS1	**T3W-S1-8M-SL-QWF1-QWR1-QGS1**
T3WFX-S1-4M-SL-QWF1-QWR1-QGS1	**T3WFX-S1-8M-SL-QWF1-QWR1-QGS1**

Wear Parts

A Standard Ceramic Cups

Part Number	Description	Nozzle	Bore Size
T2CC04	Ceramic Cup	#4	6mm - 1/4"
T2CC05	Ceramic Cup	#5	8mm - 5/16"
T2CC06	Ceramic Cup	#6	10mm - 3/8"
T2CC07	Ceramic Cup	#7	11mm - 7/16"
T2CC08	Ceramic Cup	#8	12.5mm - 1/2"
T2CC10	Ceramic Cup	#10	16mm - 5/8"

B Standard Quartz Cups

Part Number	Description	Nozzle	Bore Size
T2QZ06	Standard Quartz Cup	#6	10mm - 3/8"
T2QZ08	Standard Quartz Cup	#8	12mm - 1/2"
T2QZ10	Standard Quartz Cup	#10	15mm - 5/8"

C Collet Body

Part Number	Description	Bore Size
T2CB10	Collet Body	1.0mm - 0.04"
T2CB16	Collet Body	1.6mm - 1/16"
T2CB20	Collet Body	2.0mm - 5/64"
T2CB24	Collet Body	2.4mm - 3/32"
T2CB32	Collet Body	3.2mm - 1/8"
T2CB40	Collet Body	4.0mm - 5/32"

D Gas Lens Collet Body

Part Number	Description	Bore Size
T2GL10	Gas Lens Collet Body	1.0mm - 0.04"
T2GL16	Gas Lens Collet Body	1.6mm - 1/16"
T2GL20	Gas Lens Collet Body	2.0mm - 5/64"
T2GL24	Gas Lens Collet Body	2.4mm - 3/32"
T2GL32	Gas Lens Collet Body	3.2mm - 1/8"
T2GL40	Gas Lens Collet Body	4.0mm - 5/32"

To set-up your Arc Tig Torch please add the relevant starter kit.

Please refer to Page 50.

High Performance Ceramics Available

Withstands extreme temperatures up to 1950°C without any risk of cracking or burning.

Please refer to Page 45

HIGH PERFORMANCE SERIES

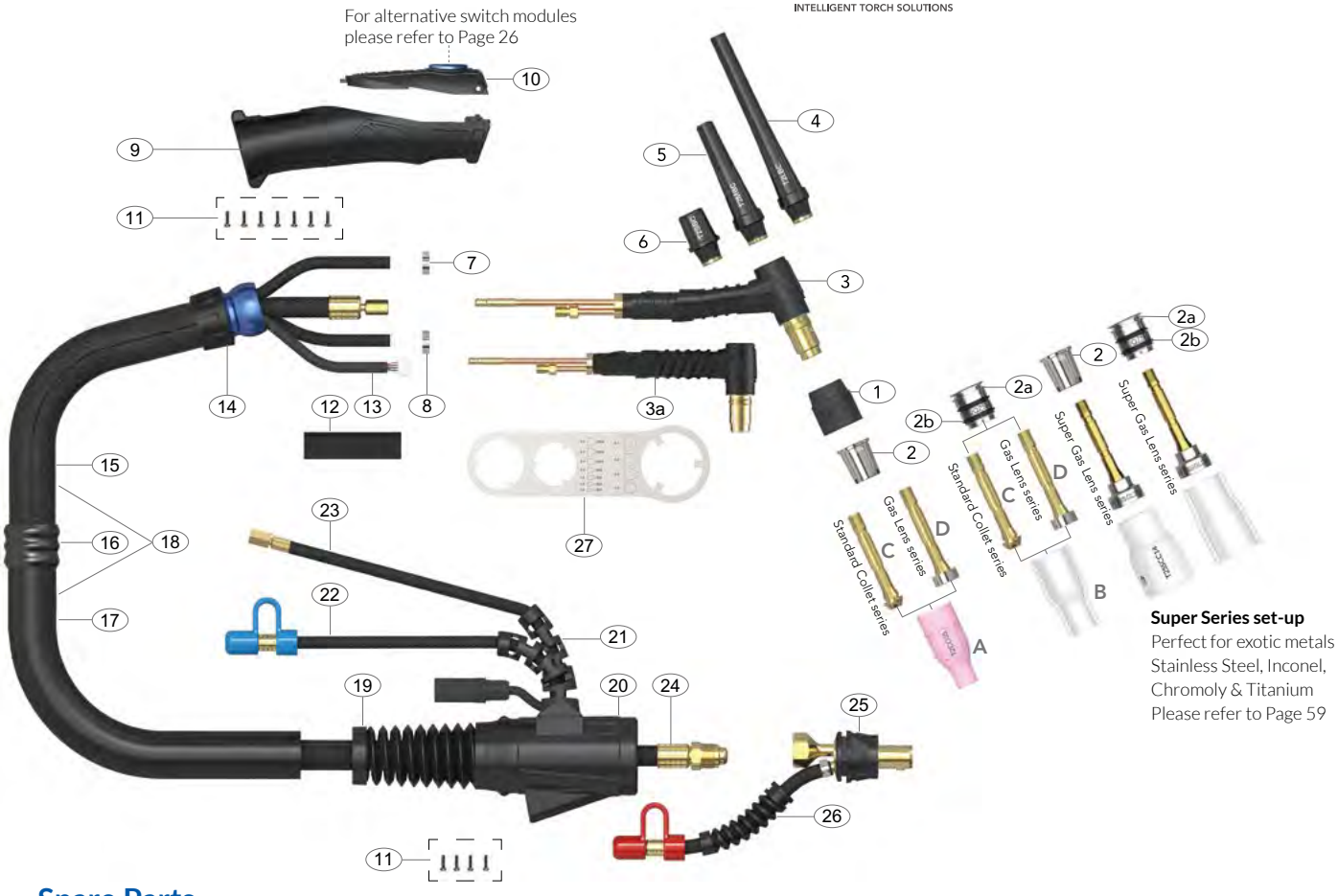

Super Series set-up
Perfect for exotic metals
Stainless Steel, Inconel,
Chromoly & Titanium
Please refer to Page 59

Spare Parts

	Part Number	Description
1	T2GS	Head Gasket
2	T2SN	Heat Zone Isolator
2a	T2QZSN20	Quartz Heat Zone Isolator
2b	QZR-D20	Special Seal Ring
3	AT4501	T3W/T4W Torch Body Liquid-Cooled
3a	AT4501F	T3WFX/T4WFX Flexible Torch Body
4	T2LBC	Long Back Cap
5	T2MBC	Medium Back Cap
6	T2SBC	Short Back Cap
7	15400022	Water Hose Clamp 9.5mm
8	15400020	Gas Hose Clamp 8.7mm
9	ATERH100	Arc Handle Kit
*10	ATER1MS	Momentary Switch Kit
11	ATPB2.6x8PB	Screw Pack
12	ATHS22MM-130	Heat Shrink Tube
13	ATERSWL4	Trigger Lead 12.5ft
	ATERSWL8	Trigger Lead 25ft
14	ATERKJ200	Knuckle Joint
15	ATERLC200-08	Leather Cover x 0.8mt
16	ATERJK200	Joint Repair Kit
17	ATERNCL-32	Neoprene Cover Assembly x 3.2m/10.5ft
	ATERNCL-72	Neoprene Cover Assembly x 7.2m/23.7ft
18	ATERCO200-40	Sheath x 12.5ft Inc Leather Cover
	ATERCO200-80	Sheath x 25ft Inc Leather Cover

	Part Number	Description
19	ATSLH26-S	Cable Support Large
20	ATSLH26-H	Surelok™ Housing Large
21	ATSLH1820-S	Surelok™ Housing Support
22	AT45V07OB-QWF#	Water Feed Hose x 12.5ft O/B Rubber
	AT45V08OB-QWF#	Water Feed Hose x 25ft O/B Rubber
23	ATN45V09OB-QGS#	Gas Supply Hose x 12.5ft O/B Rubber
	ATN45V10OB-QGS#	Gas Supply Hose x 25ft O/B Rubber
24	AT3520-4M-OB	Power Cable x 12.5ft Surelok™ O/B Rubber
	AT3520-8M-OB	Power Cable x 25ft Surelok™ O/B Rubber
25	ATSL3550	Surelok™ Body & Support
26	ATNSLOB-1-QWR#	Water Return Hose O/B
27	AT-SP	Spanner

Water feed and gas supply hoses are specified by utilizing the part number and a termination suffix from the water feed and gas supply hose table on Page 24.

Example: AT45V07OB-QWF1
Water Feed Hose Rapid Fit x 12.5ft c/w 8.9mm Quick Fit

Example: ATN45V07OB-QGS4
Gas Supply Hose Rapid Fit x 12.5ft c/w 8.9mm Quick Fit

T4W / T4WFX Liquid-Cooled Tig Welding Torch

Ratings:	12.5ft : 450A DC, 315A AC @100% duty cycle. 1.6 to 4.8mm Electrode 25ft : 450A DC, 315A AC @60% duty cycle. 1.6 to 4.8mm Electrode

An all-day high performance Tig torch suitable for Industrial level AC processes.

ARC T HIGH PERFORMANCE TIG TORCH PACKAGES

Arc Tig Torches are supplied with a momentary switch and Surelok™ 35-50mm Dinse style termination as standard.

For alternate terminations, gas and water fittings, and switch options please refer to the Torch Configurators - pages 28-38.

12.5ft	25ft
T4W-S1-4M-SL-QWF1-QWR1-QGS1	**T4W-S1-8M-SL-QWF1-QWR1-QGS1**
T4WFX-S1-4M-SL-QWF1-QWR1-QGS1	**T4WFX-S1-8M-SL-QWF1-QWR1-QGS1**

Wear Parts

A Standard Ceramic Cups

Part Number	Description	Nozzle	Bore Size
T2CC04	Ceramic Cup	#4	6mm - 1/4"
T2CC05	Ceramic Cup	#5	8mm - 5/16"
T2CC06	Ceramic Cup	#6	10mm - 3/8"
T2CC07	Ceramic Cup	#7	11mm - 7/16"
T2CC08	Ceramic Cup	#8	12.5mm - 1/2"
T2CC10	Ceramic Cup	#10	16mm - 5/8"

B Standard Quartz Cups

Part Number	Description	Nozzle	Bore Size
T2QZ06	Standard Quartz Cup	#6	10mm - 3/8"
T2QZ08	Standard Quartz Cup	#8	12mm - 1/2"
T2QZ10	Standard Quartz Cup	#10	15mm - 5/8"

C Collet Body

Part Number	Description	Bore Size
T2CB16	Collet Body	1.6mm - 1/16"
T2CB20	Collet Body	2.0mm - 5/64"
T2CB24	Collet Body	2.4mm - 3/32"
T2CB32	Collet Body	3.2mm - 1/8"
T2CB40	Collet Body	4.0mm - 5/32"
T2CB48	Collet Body	4.8mm - 3/16"

D Gas Lens Collet Body

Part Number	Description	Bore Size
T2GL16	Gas Lens Collet Body	1.6mm - 1/16"
T2GL20	Gas Lens Collet Body	2.0mm - 5/64"
T2GL24	Gas Lens Collet Body	2.4mm - 3/32"
T2GL32	Gas Lens Collet Body	3.2mm - 1/8"
T2GL40	Gas Lens Collet Body	4.0mm - 5/32"
T2GL48	Gas Lens Collet Body	4.8mm - 3/16"

To set-up your Arc Tig Torch please add the relevant starter kit.

Please refer to Page 50.

High Performance Ceramics Available

Withstands extreme temperatures up to 1950°C without any risk of cracking or burning.

Please refer to Page 45

HIGH PERFORMANCE SERIES

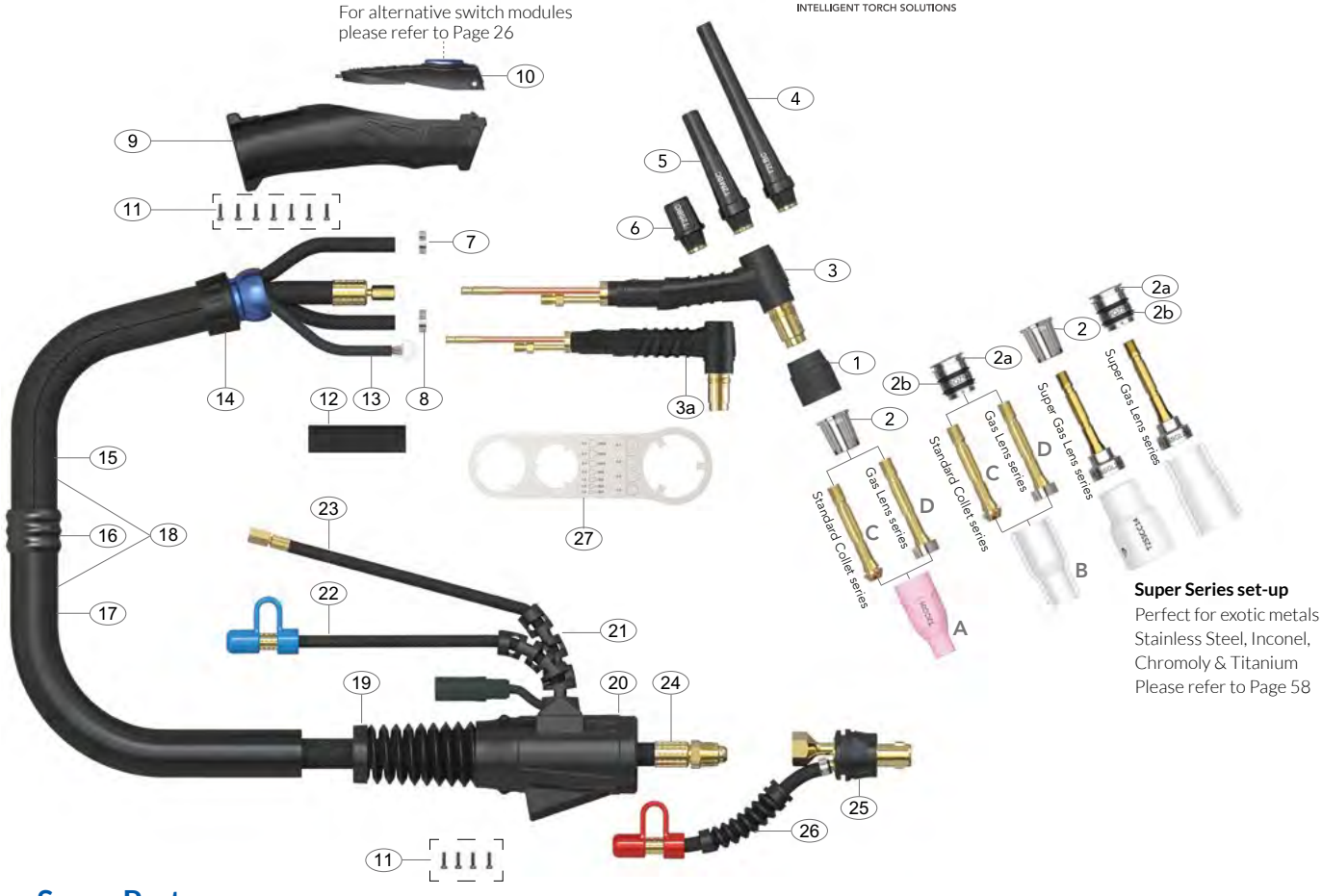

Super Series set-up
Perfect for exotic metals
Stainless Steel, Inconel,
Chromoly & Titanium
Please refer to Page 58

Spare Parts

	Part Number	Description
1	T2GS	Head Gasket
2	T2SN	Heat Zone Isolator
2a	T2QZSN20	Quartz Heat Zone Isolator
2b	QZR-D20	Special Seal Ring
3	AT4501	T3W/T4W Torch Body Liquid-Cooled
3a	AT4501F	T3WFX/T4WFX Flexible Torch Body
4	T2LBC	Long Back Cap
5	T2MBC	Medium Back Cap
6	T2SBC	Short Back Cap
7	15400022	Water Hose Clamp 9.5mm
8	15400020	Gas Hose Clamp 8.7mm
9	ATERH200	Arc Handle Kit
*10	ATER1MS	Momentary Switch Kit
11	ATPB2.6x8PB	Screw Pack
12	ATHS22MM-130	Heat Shrink Tube
13	ATERSWL4	Trigger Lead 12.5ft
	ATERSWL8	Trigger Lead 25ft
14	ATERKJ200	Knuckle Joint
15	ATERLC200-08	Leather Cover x 0.8mt
16	ATERJK200	Joint Repair Kit
17	ATERNCL-32	Neoprene Cover Assembly x 3.2m/10.5ft
	ATERNCL-72	Neoprene Cover Assembly x 7.2m/23.7ft
18	ATERCO200-40	Sheath x 12.5ft Inc Leather Cover
	ATERCO200-80	Sheath x 25ft Inc Leather Cover

	Part Number	Description
19	ATSLH26-S	Cable Support Large
20	ATSLH26-H	Surelok™ Housing Large
21	ATSLH1820-S	Surelok™ Housing Support
22	AT45V07OB-QWF#	Water Feed Hose x 12.5ft O/B Rubber
	AT45V08OB-QWF#	Water Feed Hose x 25ft O/B Rubber
23	ATN45V09OB-QGS#	Gas Supply Hose x 12.5ft O/B Rubber
	ATN45V10OB-QGS#	Gas Supply Hose x 25ft O/B Rubber
24	AT4520-4M-OB	Power Cable x 12.5ft Surelok™ O/B Rubber
	AT4520-8M-OB	Power Cable x 25ft Surelok™ O/B Rubber
25	ATSL3550	Surelok™ Body & Support
26	ATNSLOB-1-QWR#	Water Return Hose O/B
27	AT-SP	Spanner

Water feed and gas supply hoses are specified by utilizing the part number and a termination suffix from the water feed and gas supply hose table on Page 24.

Example: AT45V07OB-QWF1
Water Feed Hose Rapid Fit x 12.5ft c/w 8.9mm Quick Fit

Example: ATN45V07OB-QGS4
Gas Supply Hose Rapid Fit x 12.5ft c/w 8.9mm Quick Fit

T5W / T5WFX Liquid-Cooled Tig Welding Torch

Ratings:	12.5ft : 550A DC, 385A AC @100% duty cycle. 1.6 to 6.4mm Electrode 25ft : 550A DC, 385A AC @60% duty cycle. 1.6 to 6.4mm Electrode

The World's most powerful Tig torch for the most demanding performance applications.

T5W Video

ARC T HIGH PERFORMANCE TIG TORCH PACKAGES

Arc Tig Torches are supplied with a momentary switch and Surelok™ 35-50mm Dinse style termination as standard.

For alternate terminations, gas and water fittings, and switch options please refer to the Torch Configurators - pages 28-38.

12.5ft	25ft
T5W-S1-4M-SL-QWF1-QWR1-QGS1	**T5W-S1-8M-SL-QWF1-QWR1-QGS1**
T5WFX-S1-4M-SL-QWF1-QWR1-QGS1	**T5WFX-S1-8M-SL-QWF1-QWR1-QGS1**

Wear Parts

A Standard Ceramic Cups

Part Number	Description	Nozzle	Bore Size
T3CC04	Ceramic Cup	#4	6mm - 1/4"
T3CC05	Ceramic Cup	#5	8mm - 5/16"
T3CC06	Ceramic Cup	#6	10mm - 3/8"
T3CC07	Ceramic Cup	#7	11mm - 7/16"
T3CC08	Ceramic Cup	#8	12.5mm - 1/2"
T3CC10	Ceramic Cup	#10	16mm - 5/8"
T3CC12	Ceramic Cup	#12	19mm - 3/4"

B Large Gas Lens Ceramic Cups

Part Number	Description	Nozzle	Bore Size
T5LGLCC08	Large Gas Lens Ceramic Cup	#8	12.5mm - 1/2"
T5LGLCC10	Large Gas Lens Ceramic Cup	#10	16mm - 5/8"
T5LGLCC12	Large Gas Lens Ceramic Cup	#12	19mm - 3/4"
T5LGLCC14	Large Gas Lens Ceramic Cup	#14	24mm - 15/16"

C Collet Body

Part Number	Description	Bore Size
T3CB16	Collet Body	1.6mm - 1/16"
T3CB20	Collet Body	2.0mm - 5/64"
T3CB24	Collet Body	2.4mm - 3/32"
T3CB32	Collet Body	3.2mm - 1/8"
T3CB40	Collet Body	4.0mm - 5/32"
T3CB48	Collet Body	4.8mm - 3/16"
T3CB64	Collet Body	6.4mm - 1/4"

D Standard Quartz Cups

Part Number	Description	Nozzle	Bore Size
T3QZ06	Standard Quartz Cup	#6	10mm - 3/8"
T3QZ08	Standard Quartz Cup	#8	12mm - 1/2"
T3QZ10	Standard Quartz Cup	#10	15mm - 5/8"
T3QZ12	Standard Quartz Cup	#12	20mm - 3/4"

E Gas Lens Collet Body

Part Number	Description	Bore Size
T3GL16	Gas Lens Collet Body	1.6mm - 1/16"
T3GL20	Gas Lens Collet Body	2.0mm - 5/64"
T3GL24	Gas Lens Collet Body	2.4mm - 3/32"
T3GL32	Gas Lens Collet Body	3.2mm - 1/8"
T3GL40	Gas Lens Collet Body	4.0mm - 5/32"
T3GL48	Gas Lens Collet Body	4.8mm - 3/16"
T3GL64	Gas Lens Collet Body	6.4mm - 1/4"

F Large Gas Lens Collet Body

Part Number	Description	Bore Size
T5LGL16	Large Gas Lens Collet Body	1.6mm - 1/16"
T5LGL20	Large Gas Lens Collet Body	2.0mm - 5/64"
T5LGL24	Large Gas Lens Collet Body	2.4mm - 3/32"
T5LGL32	Large Gas Lens Collet Body	3.2mm - 1/8"
T5LGL40	Large Gas Lens Collet Body	4.0mm - 5/32"
T5LGL48	Large Gas Lens Collet Body	4.8mm - 3/16"
T5LGL64	Large Gas Lens Collet Body	6.4mm - 1/4"

To set-up your Arc Tig Torch please add the relevant starter kit.

Please refer to Page 50.

HIGH PERFORMANCE SERIES

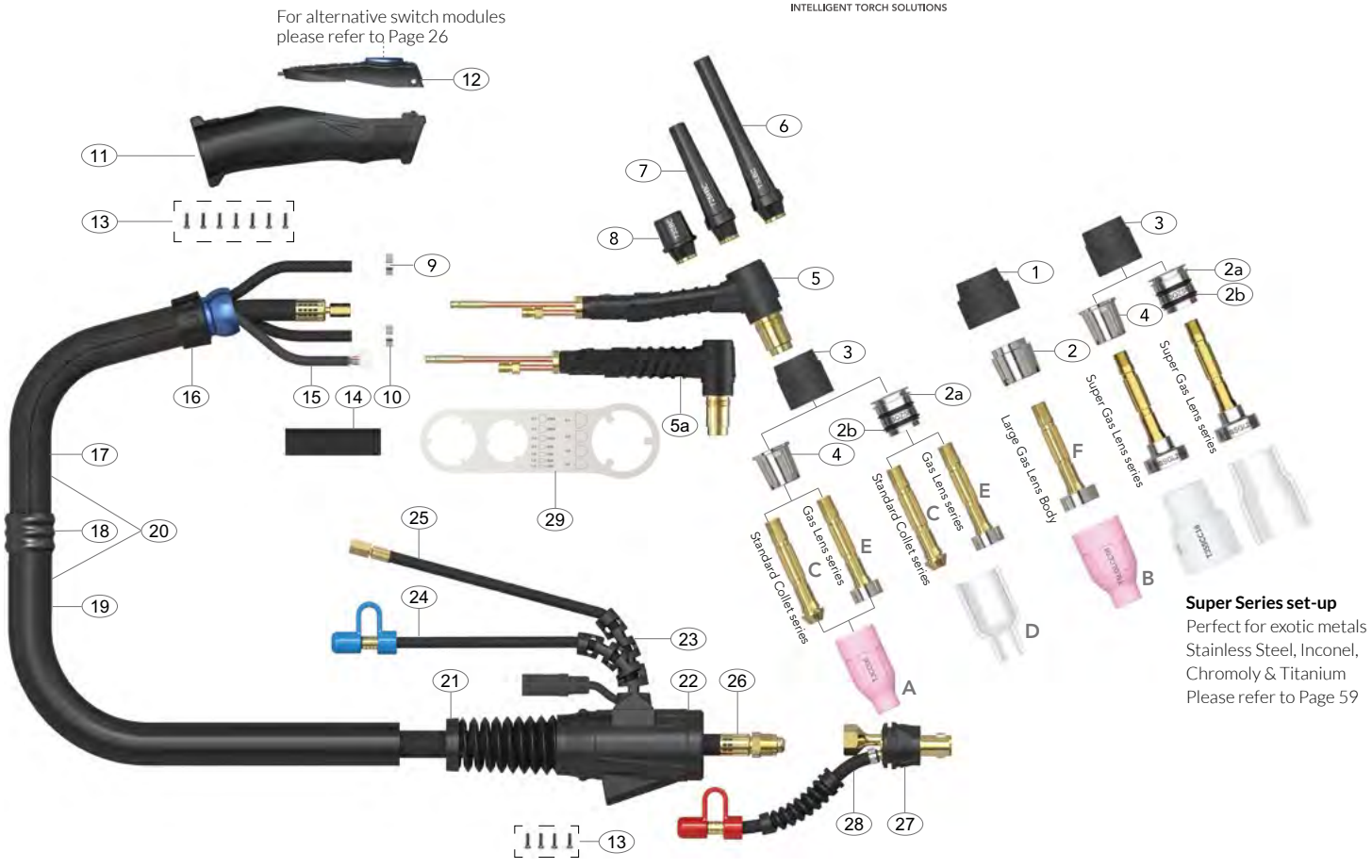

Super Series set-up
Perfect for exotic metals
Stainless Steel, Inconel,
Chromoly & Titanium
Please refer to Page 59

Spare Parts

	Part Number	Description
1	T3LGS	Large Head Gasket
2	T3LSN	Large Heat Zone Isolator
2a	T3QZSN23	Quartz Heat Zone Isolator
2b	QZR-D23	Special Seal Ring
3	T3GS	Head Gasket
4	T3SN	Heat Zone Isolator
5	AT5501	T5W Torch Body Liquid-Cooled
5a	AT5501F	T5WFX Flexible Torch Body
6	T3LBC	Long Back Cap
7	T3MBC	Medium Back Cap
8	T3SBC	Short Back Cap
9	15400022	Water Hose Clamp 9.5mm
10	15400020	Gas Hose Clamp 8.7mm
11	ATERH200	Arc Handle Kit
*12	ATER1MS	Momentary Switch Kit
13	ATPB2.6x8PB	Screw Pack
14	ATHS22MM-130	Heat Shrink Tube
15	ATERSWL4	Trigger Lead 12.5ft
	ATERSWL8	Trigger Lead 25ft
16	ATERKJ200	Knuckle Joint
17	ATERLC200-08	Leather Cover x 0.8mt
18	ATERJK200	Joint Repair Kit
19	ATERNCL-32	Neoprene Cover Assembly x 3.2m/10.5ft
	ATERNCL-72	Neoprene Cover Assembly x 7.2m/23.7ft
20	ATERCO200-40	Sheath x 12.5ft Inc Leather Cover
	ATERCO200-80	Sheath x 25ft Inc Leather Cover

	Part Number	Description
21	ATSLH26-S	Cable Support Large
22	ATSLH26-H	Surelok™ Housing Large
23	ATSLH1820-S	Surelok™ Housing Support
24	AT45V07OB-QWF#	Water Feed Hose x 12.5ft O/B Rubber
	AT45V08OB-QWF#	Water Feed Hose x 25ft O/B Rubber
25	ATN45V09OB-QGS#	Gas Supply Hose x 12.5ft O/B Rubber
	ATN45V10OB-QGS#	Gas Supply Hose x 25ft O/B Rubber
26	AT5520-4M-OB	Power Cable x 12.5ft Surelok™ O/B Rubber
	AT5520-8M-OB	Power Cable x 25ft Surelok™ O/B Rubber
27	ATSL3550	Surelok™ Body & Support
28	ATNSLOB-1-QWR#	Water Return Hose O/B
29	AT-SP	Spanner

Water feed and gas supply hoses are specified by utilizing the part number and a termination suffix from the water feed and gas supply hose table on Page 24.

Example: AT45V07OB-QWF1
Water Feed Hose Rapid Fit x 12.5ft c/w 8.9mm Quick Fit

Example: ATN45V07OB-QGS4
Gas Supply Hose Rapid Fit x 12.5ft c/w 8.9mm Quick Fit

High Performance Ceramics Available

Withstands extreme temperatures up to 1950°C without any risk of cracking or burning.
Please refer to Page 45

New

T5WA Auto Liquid-Cooled Tig Welding Torch

Ratings:	12.5ft : 550A DC, 385A AC @100% duty cycle. 1.6 to 6.4mm Electrode 25ft : 450A DC, 315A AC @100% duty cycle. 1.6 to 6.4mm Electrode

A High Performance Automatic/Cobotic Tig Torch for consistent, high weld quality in the most demanding applications.

Handle Dimension

ARC T HIGH PERFORMANCE TIG TORCH PACKAGES

Arc Tig Torches are supplied SurelokTM 35-50mm Dinse style termination as standard. For alternate terminations, gas and water fittings, please refer to the Torch Configurators - pages 28-38.

12.5ft	25ft
T5WA-4M-SL-QWF1-QWR1-QGS1	**T5WA-8M-SL-QWF1-QWR1-QGS1**

Wear Parts

A Standard Ceramic Cups

Part Number	Description	Nozzle	Bore Size
T3CC04	Ceramic Cup	#4	6mm - 1/4"
T3CC05	Ceramic Cup	#5	8mm - 5/16"
T3CC06	Ceramic Cup	#6	10mm - 3/8"
T3CC07	Ceramic Cup	#7	11mm - 7/16"
T3CC08	Ceramic Cup	#8	12.5mm - 1/2"
T3CC10	Ceramic Cup	#10	16mm - 5/8"
T3CC12	Ceramic Cup	#12	19mm - 3/4"

B Large Gas Lens Ceramic Cups

Part Number	Description	Nozzle	Bore Size
T5LGLCC08	Large Gas Lens Ceramic Cup	#8	12.5mm - 1/2"
T5LGLCC10	Large Gas Lens Ceramic Cup	#10	16mm - 5/8"
T5LGLCC12	Large Gas Lens Ceramic Cup	#12	19mm - 3/4"
T5LGLCC14	Large Gas Lens Ceramic Cup	#14	24mm - 15/16"

C Collet Body

Part Number	Description	Bore Size
T3CB16	Collet Body	1.6mm - 1/16"
T3CB20	Collet Body	2.0mm - 5/64"
T3CB24	Collet Body	2.4mm - 3/32"
T3CB32	Collet Body	3.2mm - 1/8"
T3CB40	Collet Body	4.0mm - 5/32"
T3CB48	Collet Body	4.8mm - 3/16"
T3CB64	Collet Body	6.4mm - 1/4"

D Standard Quartz Cups

Part Number	Description	Nozzle	Bore Size
T3QZ06	Standard Quartz Cup	#6	10mm - 3/8"
T3QZ08	Standard Quartz Cup	#8	12mm - 1/2"
T3QZ10	Standard Quartz Cup	#10	15mm - 5/8"
T3QZ12	Standard Quartz Cup	#12	20mm - 3/4"

E Gas Lens Collet Body

Part Number	Description	Bore Size
T3GL16	Gas Lens Collet Body	1.6mm - 1/16"
T3GL20	Gas Lens Collet Body	2.0mm - 5/64"
T3GL24	Gas Lens Collet Body	2.4mm - 3/32"
T3GL32	Gas Lens Collet Body	3.2mm - 1/8"
T3GL40	Gas Lens Collet Body	4.0mm - 5/32"
T3GL48	Gas Lens Collet Body	4.8mm - 3/16"
T3GL64	Gas Lens Collet Body	6.4mm - 1/4"

F Large Gas Lens Collet Body

Part Number	Description	Bore Size
T5LGL16	Large Gas Lens Collet Body	1.6mm - 1/16"
T5LGL20	Large Gas Lens Collet Body	2.0mm - 5/64"
T5LGL24	Large Gas Lens Collet Body	2.4mm - 3/32"
T5LGL32	Large Gas Lens Collet Body	3.2mm - 1/8"
T5LGL40	Large Gas Lens Collet Body	4.0mm - 5/32"
T5LGL48	Large Gas Lens Collet Body	4.8mm - 3/16"
T5LGL64	Large Gas Lens Collet Body	6.4mm - 1/4"

To set-up your Arc Tig Torch please add the relevant starter kit.

Please refer to Page 50.

HIGH PERFORMANCE SERIES

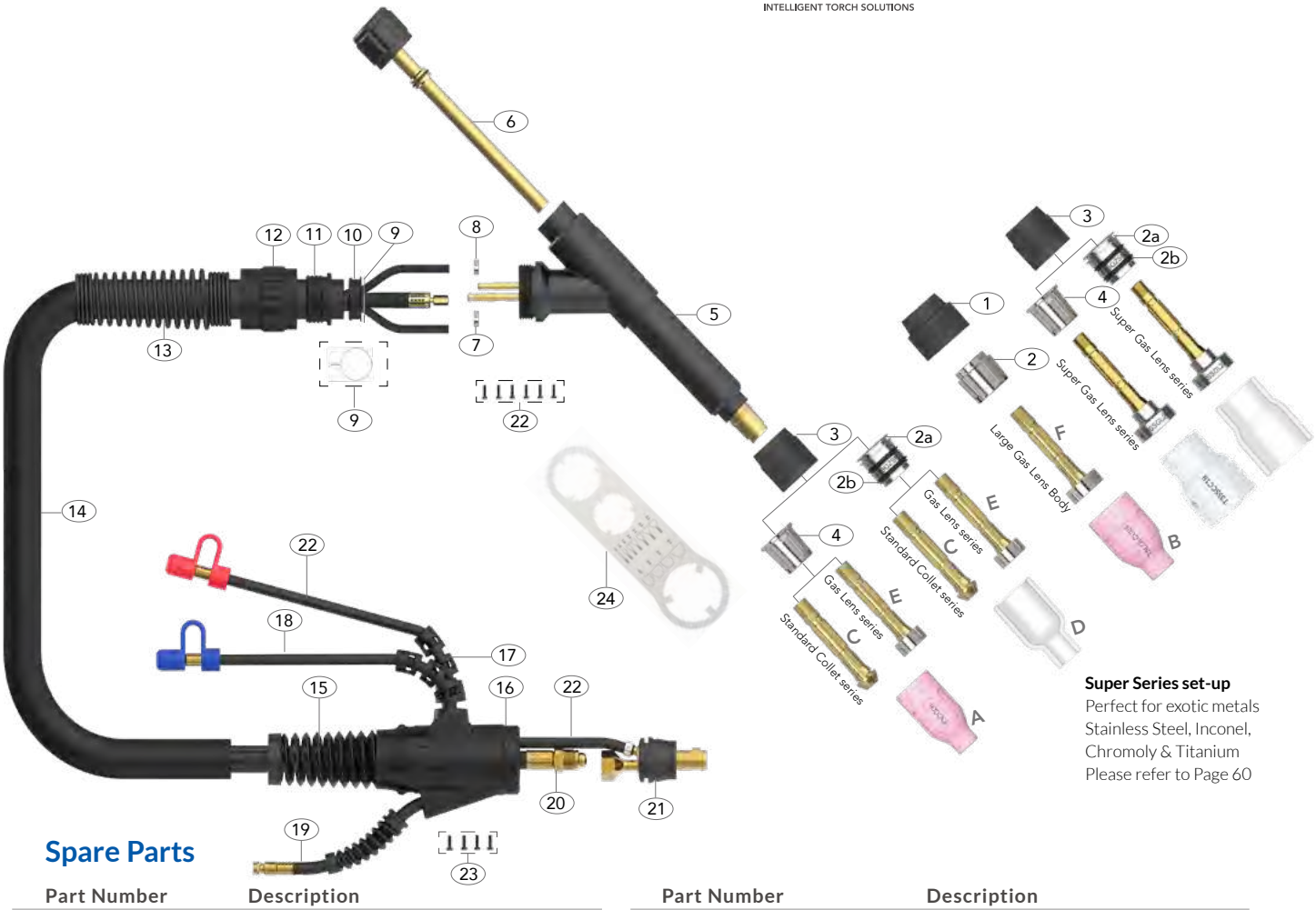

Super Series set-up
Perfect for exotic metals
Stainless Steel, Inconel,
Chromoly & Titanium
Please refer to Page 60

Spare Parts

	Part Number	Description
1	T3LGS	Large Head Gasket
2	T3LSN	Large Heat Zone Isolator
2a	T3QZSN23	Quartz Heat Zone Isolator
2b	QZR-D23	Special Seal Ring
3	T3GS	Head Gasket
4	T3SN	Heat Zone Isolator
5	T5WA	T5W Auto Liquid-Cooled Torch Body
6	T5WABC	T5W Auto Torch Back Cap
7	ATB5024	Water Hose Clamp 9.5mm
8	ATB5025S	Gas Hose Clamp 8.0mm
9	ATWA9115F	Wire Clamp
10	AMB8010	Canvas Cover Retainer
11	AMB8110A	Auto Handle Insert
12	AMB8030A	Auto Handle Lock Nut
13	AMB8017A	Auto Handle Spring
14	AT200-40	Neoprene Sheath x 12.5ft
	AT200-80	Neoprene Sheath x 25ft
15	ATSLH26-S	Cable Support Large
16	ATSLH26-H	Surelok™ Housing Large
17	ATSLH1820-S	Surelok™ Housing Support
18	ATPAP45V07OB-QWF#	Water Feed Hose x 12.5ft O/B Rubber
	ATPAP45V08OB-QWF#	Water Feed Hose x 25ft O/B Rubber

	Part Number	Description
19	ATPAUN45V09OB-QGS#	Gas Supply Hose x 12.5ft O/B Rubber
	ATPAUN45V10OB-QGS#	Gas Supply Hose x 25ft O/B Rubber Power
20	AT5520-4M-OB	Cable x 12.5ft Surelok™ O/B Rubber Power
	AT5520-8M-OB	Cable x 25ft Surelok™ O/B Rubber
21	ATSL3550	Surelok™ Body & Support
22	ATNSLOB-1-QWR#	Water Return Hose O/B
23	ATPB2.6 x 8PB	Screw Pack
24	AT-SP	Spanner

Water feed and gas supply hoses are specified by utilizing the part number and a termination suffix from the water feed and gas supply hose table on Page 24.

Example: ATPAP45V07OB-QWF1
Water Feed Hose Rapid Fit x 12.5ft c/w 8.9mm Quick Fit

Example: ATPAUN45V07OB-QGS4
Gas Supply Hose Rapid Fit x 12.5ft c/w 8.9mm Quick Fit

High Performance Ceramics Available

Withstands extreme temperatures up to 1950°C without any risk of cracking or burning.
Please refer to Page 45

ARC T RAPID FIT CONNECTION SYSTEM

A new flexible system of quickly changing Gas and Liquid supply hoses at Point of Sale.

- Removes the necessity to cut and re-crimp terminations
- All terminations interchange on a common hose connector
- All terminations can be removed and recoupled with a standard spanner and Allen key

Air-Cooled Rapid Fit Connectors

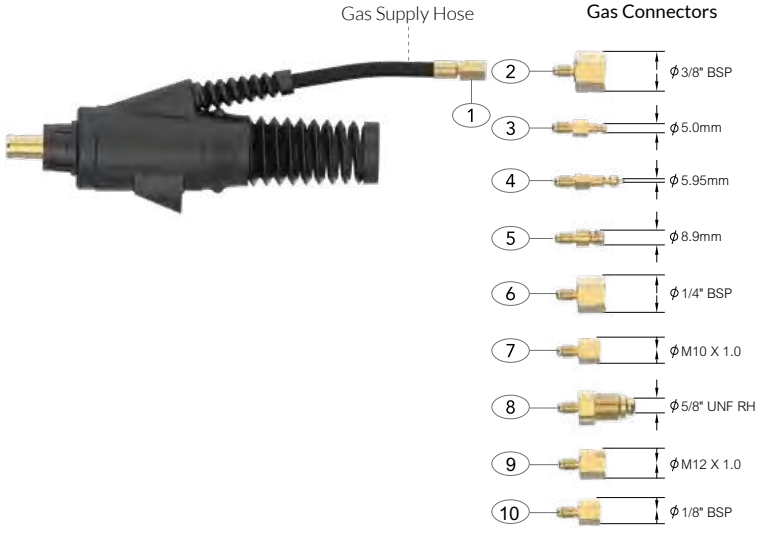

Gas Supply Hose - Rapid Fit

	Part No.	Description
1	QGS0	Open
2	QGS1	Gas Supply Hose c/w 3/8" BSP
3	QGS2	Gas Supply Hose c/w 5.0mm Quick Fit
4	QGS3	Gas Supply Hose c/w 5.95mm Quick Fit
5	QGS4	Gas Supply Hose c/w 8.9mm Quick Fit
6	QGS5	Gas Supply Hose c/w 1/4" BSP
7	QGS6	Gas Supply Hose c/w M10 x 1.0
8	QGS7	Gas Supply Hose c/w 5/8" UNF RH
9	QGS8	Gas Supply Hose c/w M12 x 1.0
10	QGS9	Gas Supply Hose c/w 1/8" BSP

Liquid-Cooled Rapid Fit Connectors

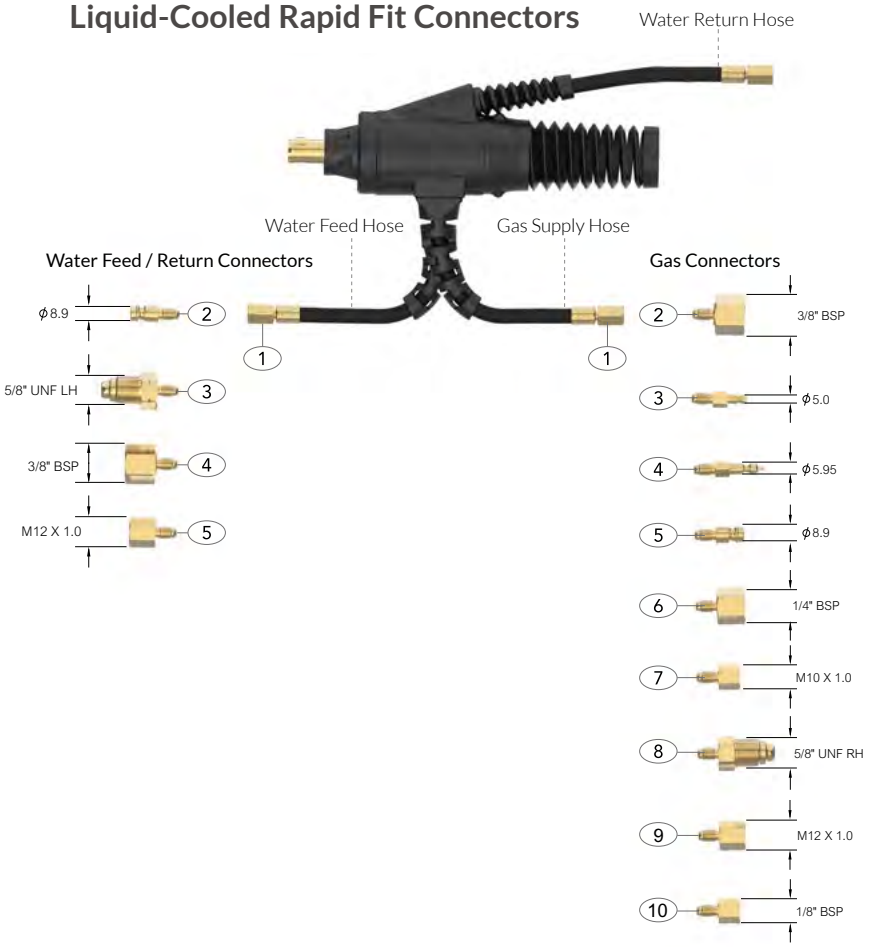

Water Feed Hose - Rapid Fit

	Part No.	Description
1	QWF0	Open
2	QWF1	Water Feed Hose c/w 8.9mm Quick Fit
3	QWF2	Water Feed Hose c/w 5/8" UNF LH
4	QWF3	Water Feed Hose c/w 3/8" BSP
5	QWF4	Water Feed Hose c/w M12 x 1.0

Water Return Hose - Rapid Fit

	Part No.	Description
1	QWR0	Open
2	QWR1	Water Return Hose c/w 8.9mm Quick Fit
3	QWR2	Water Return Hose c/w 5/8" UNF LH
4	QWR3	Water Return Hose c/w 3/8" BSP
5	QWR4	Water Return Hose c/w M12 x 1.0

Gas Supply Hose - Rapid Fit

	Part No.	Description
1	QGS0	Open
2	QGS1	Gas Supply Hose c/w 3/8" BSP
3	QGS2	Gas Supply Hose c/w 5.0mm Quick Fit
4	QGS3	Gas Supply Hose c/w 5.95mm Quick Fit
5	QGS4	Gas Supply Hose c/w 8.9mm Quick Fit
6	QGS5	Gas Supply Hose c/w 1/4" BSP
7	QGS6	Gas Supply Hose c/w M10 x 1.0
8	QGS7	Gas Supply Hose c/w 5/8" UNF RH
9	QGS8	Gas Supply Hose c/w M12 x 1.0
10	QGS9	Gas Supply Hose c/w 1/8" BSP

RAPID FIT REFERENCE TABLE

arc TORCHOLOGY INTELLIGENT TORCH SOLUTIONS | MAKE WORK LIFE EASIER

Gas Supply Hose - Rapid Fit

	Part No.	Description	Surelok Air-Cooled	Surelok Liquid-Cooled	Surelok GT Air-Cooled	Surelok GT Liquid-Cooled	Surelok QD Air-Cooled	Surelok QD Liquid-Cooled	Surelok QD 5 Liquid-Cooled
1	QGS0	Open	●	●	○	○	○	●	○
2	QGS1	Gas Supply Hose c/w 3/8" BSP	●	●	○	○	○	●	○
3	QGS2	Gas Supply Hose c/w 5.0mm Quick Fit	●	●	○	○	○	●	○
4	QGS3	Gas Supply Hose c/w 5.95mm Quick Fit	●	●	○	○	○	●	○
5	QGS4	Gas Supply Hose c/w 8.9mm Quick Fit	●	●	○	○	○	●	○
6	QGS5	Gas Supply Hose c/w 1/4" BSP	●	●	○	○	○	●	○
7	QGS6	Gas Supply Hose c/w M10 x 1.0	●	●	○	○	○	●	○
8	QGS7	Gas Supply Hose c/w 5/8" UNF RH	●	●	○	○	○	●	○
9	QGS8	Gas Supply Hose c/w M12 x 1.0	●	●	○	○	○	●	○
10	QGS9	Gas Supply Hose c/w 1/8" BSP	●	●	○	○	○	●	○

Water Feed Hose - Rapid Fit

	Part No.	Description	Surelok Air-Cooled	Surelok Liquid-Cooled	Surelok GT Air-Cooled	Surelok GT Liquid-Cooled	Surelok QD Air-Cooled	Surelok QD Liquid-Cooled	Surelok QD 5 Liquid-Cooled
1	QWF0	Open	○	●	○	●	○	●	●
2	QWF1	Water Feed Hose c/w 8.9mm Quick Fit	○	●	○	●	○	●	●
3	QWF2	Water Feed Hose c/w 5/8" UNF LH	○	●	○	●	○	●	●
4	QWF3	Water Feed Hose c/w 3/8" BSP	○	●	○	●	○	●	●
5	QWF4	Water Feed Hose c/w M12 x 1.0	○	●	○	●	○	●	●

Water Return - Rapid Fit

	Part No.	Description	Surelok Air-Cooled	Surelok Liquid-Cooled	Surelok GT Air-Cooled	Surelok GT Liquid-Cooled	Surelok QD Air-Cooled	Surelok QD Liquid-Cooled	Surelok QD 5 Liquid-Cooled
1	QWR0	Open	○	●	○	●	○	○	●
2	QWR1	Water Return Hose c/w 8.9mm Quick Fit	○	●	○	●	○	○	●
3	QWR2	Water Return Hose c/w 5/8" UNF LH	○	●	○	●	○	○	●
4	QWR3	Water Return Hose c/w 3/8" BSP	○	●	○	●	○	○	●
5	QWR4	Water Return Hose c/w M12 x 1.0	○	●	○	●	○	○	●

● Denotes applicable model

SWITCH MODULES

Torch packages are supplied with a momentary switch as standard.

- All modules 'plug and play'
- All switch options interchange across the range
- All replacement switch kits include switch modules and housings.

Blank Canopy

Press and Release - No Pressing Involved With Blank Canopy

Code	Part Number	Description
S0	ATERBS	Blank Kit

Standard Module

Press and Release - On/Off Switch

Code	Part Number	Description
S1	ATER1MS	Momentary Kit

3 Button Momentary Module

Press and Release - On/Off Switch Program Setting Up/Down or Current Up/Down

Code	Part Number	Description
S3	ATER3MS	3 Button Momentary Kit

Standard Switch and Potentiometer Module

Press and Release - On/Off for Welding Machines with Current Adjustment

Code	Part Number	Description
1KH	ATER1MS-1H	Momentary Kit+1K Horizontal Pot
2KH	ATER1MS-5H	Momentary Kit+5K Horizontal Pot
3KH	ATER1MS-10H	Momentary Kit+10K Horizontal Pot
4KH	ATER1MS-25H	Momentary Kit+25K Horizontal Pot

Maintained Switch and Potentiometer Module

Press On / Press Off switch - 4T Switch and Potentiometer Adjustment

Code	Part Number	Description
1TH	ATER1MT-1H	Maintained Kit+1K Horizontal Pot
2TH	ATER1MT-5H	Maintained Kit+5K Horizontal Pot
3TH	ATER1MT-10H	Maintained Kit+10K Horizontal Pot
4TH	ATER1MT-25H	Maintained Kit+25K Horizontal Pot

2 Button Rocker Module

Push and Release - On/Off Switch
Pull and Release - Optional Secondary Function (Rocks When Pressed)

Code	Part Number	Description
RK2	ATRK2	2 Button Rocker Switch Kit

4 Button Rocker Module

Push / Pull and Release - On/Off Switch / Secondary Function
Push / Pull and Release - Optional On/Off - Up/Down / Secondary Functionality.
(Rocks When Pressed)

Code	Part Number	Description
RK4	ATRK4	4 Double Button Rocker Module

Digital Control Module

Module On/Off illumination
Real Time Digital Display of Parameters
Multi Function Switching Option
Job Number Recall / Amps / Slope Up/Down / Post Flow / Arc Frequency / Pulse Frequency / Wire Speed

Code	Part Number	Description
DM3	ATDM3	Digital Control Module

*Digital signalling requires software systems integration in collaboration with equipment manufacturers.

QUICK FIT SWITCH WIRE PLUG KITS

arc TORCHOLOGY INTELLIGENT TORCH SOLUTIONS | MAKE WORK LIFE EASIER

Code	Part Number	Description
ATP0	ATERCPN	Blank

Code	Part Number	Description
ATP1	ATERCP11	7 Pin Uniarc Quick Fit

Code	Part Number	Description
ATP2	ATERCP9	5 Pin Tuchel Plug Quick Fit

Code	Part Number	Description
ATP3	ATXS12-J3P	3 Pin XS12 Series Plug Quick Fit

Code	Part Number	Description
ATP4	ATERCP6-5	5 Pin Amphenol Plug Quick Fit

Code	Part Number	Description
ATP5	ATERCP3	6 Pin Amphenol Plug Quick Fit

Code	Part Number	Description
ATP6	ATWS16J7TQ	7 Pin WS16 Series Plug Quick Fit

Code	Part Number	Description
ATP7	ATERCP4	14 Pin Amphenol Plug Quick Fit

Code	Part Number	Description
ATP8	ATSP2110-P9	9 Pin SP21 Series Plug Quick Fit

Code	Part Number	Description
ATP9	ATWS16J5TQ	5 Pin WS16 Series Plug Quick Fit

Code	Part Number	Description
ATP10	ATERCP8	9 Pin Tuchel Plug Quick Fit

Code	Part Number	Description
ATP15	AT16S-1PZ	7 Pin Amphenol Plug Quick Fit

Surelok™ Air-Cooled Terminations

Step 1	Step 2	Step 3	Step 4	Step 5	Step 6	Step 7
Torch Model	Switch Option	Cable Length	Power Connections	Gas Connections	Switch Plug	Starter Kit

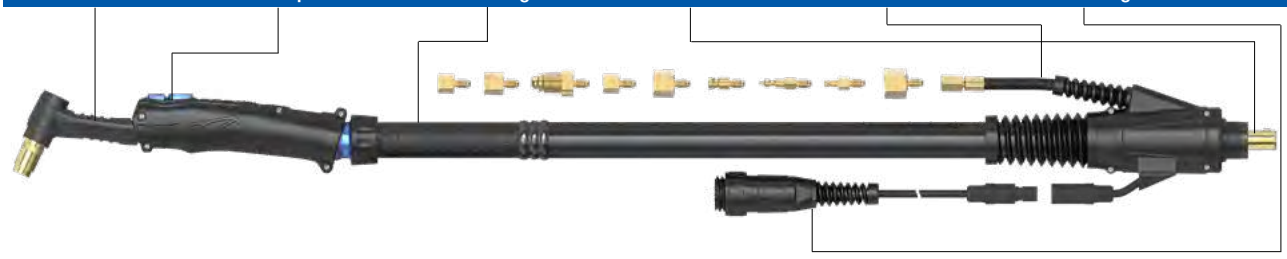

How to Order:

To order your Arc Tig Torch please follow the simple 7 stage process below:

1. Select the torch model
2. Select the switch option
3. Select the length of cable
4. Select the power connection
5. Select the rapid fit gas connection
6. Select the quick fit switch plug
7. Select the starter kit

Example:

T2-S1-4M-SL-QGS5-ATP1/SCB1

T2 Arc Tig Torch x 12.5ft with momentary switch, large Dinse Air-Cooled Surelok™ style 1/4"BSP Gas and 7 pin quick fit switch plug with small collet body starter kit 1.0mm-0.04".

Step 1	Step 2	Step 3	Step 4	Step 5	Step 6	Step 7
Torch Model	Switch Option	Cable Length	Power Connections	Gas Connections	Switch Plug	Starter Kit

Code	Description
Air-Cooled	
T1	140A DC
T1FX	140A DC Flex
T2	190A DC
T2FX	180A DC Flex
T3	240A DC
T3FX	220A DC Flex

Code	Description
S0	Blank Kit
S1	Momentary Kit
S3	3 Button Momentary Kit
1KH	1 Button Momentary+1k Pot
2KH	1 Button Momentary+5k Pot
3KH	1 Button Momentary+10k Pot
4KH	1 Button Momentary+25k Pot
1TH	Maintained Switch+1k Pot
2TH	Maintained Switch+5k Pot
3TH	Maintained Switch+10k Pot
4TH	Maintained Switch+25k Pot
RK2	2 Button Rocker Switch Kit
RK4	4 Button Rocker Switch Kit
*DM3	Digital Control Module

*Requires digital software systems integration

Code	Description
4m	12.5ft Cable
8m	25ft Cable

Power Connections

Code	Description
SL1625	Small Dinse Surelok™ Style
SL	Large Dinse Surelok™ Style

 # Gas Supply Hose - Rapid Fit

Code	Description
QGS0	Open
QGS1	Gas Supply Hose c/w 3/8" BSP
QGS2	Gas Supply Hose c/w 5.0mm Quick Fit
QGS3	Gas Supply Hose c/w 5.95mm Quick Fit
QGS4	Gas Supply Hose c/w 8.9mm Quick Fit
QGS5	Gas Supply Hose c/w 1/4" BSP
QGS6	Gas Supply Hose c/w M10 x 1.0
QGS7	Gas Supply Hose c/w 5/8" UNF RH
QGS8	Gas Supply Hose c/w M12 x 1.0
QGS9	Gas Supply Hose c/w 1/8" BSP

Code	Description
ATP0	Blank
ATP1	7 Pin Uniarc Quick Fit
ATP2	5 Pin Tuchel Plug Quick Fit
ATP3	3 Pin XS12 Series Plug Quick Fit
ATP4	5 Pin Amphenol Plug Quick Fit
ATP5	6 Pin Amphenol Plug Quick Fit
ATP6	7 Pin WS16 Series Plug Quick Fit
ATP7	14 Pin Amphenol Plug Quick Fit
ATP8	9 Pin SP21 Series Plug Quick Fit
ATP9	5 Pin WS16 Series Plug Quick Fit
ATP10	9 Pin Tuchel Plug Quick Fit
ATP15	7 Pin Amphenol Plug Quick Fit

Starter Kit

Please refer to Page 50 for starter kits

TORCH PACKAGE CONFIGURATORS

arc TORCHOLOGY INTELLIGENT TORCH SOLUTIONS | MAKE WORK LIFE EASIER

Surelok™ Liquid-Cooled Terminations

Step 1	Step 2	Step 3	Step 4	Step 5	Step 6	Step 7	Step 8	Step 9
Torch Model	Switch Option	Cable Length	Power Connections	Water Feed Hose	Water Return Hose	Gas Hose	Switch Plug	Starter Kit

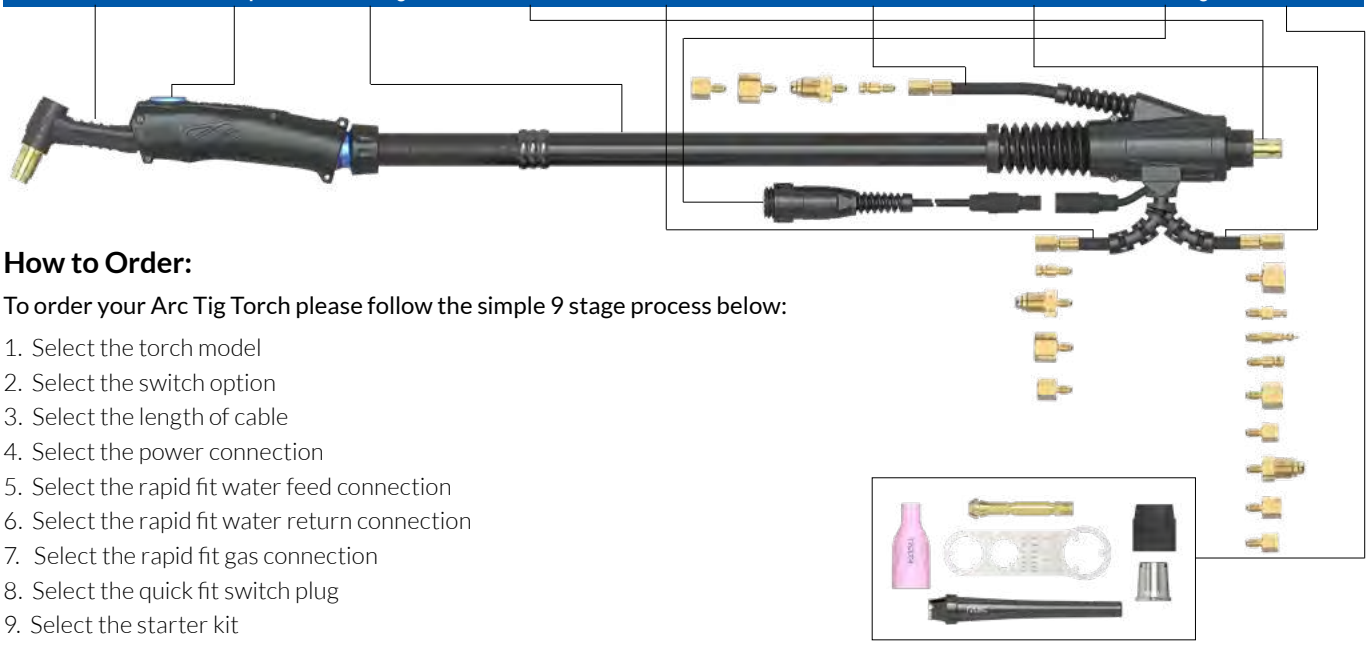

How to Order:

To order your Arc Tig Torch please follow the simple 9 stage process below:

1. Select the torch model
2. Select the switch option
3. Select the length of cable
4. Select the power connection
5. Select the rapid fit water feed connection
6. Select the rapid fit water return connection
7. Select the rapid fit gas connection
8. Select the quick fit switch plug
9. Select the starter kit

Example:

T3W-S1-4M-SL-QWF1-QWR1-QWGS5-ATP1/SCB2

T3W Arc Tig Torch x 12.5ft with momentary switch, large Dinse Liquid-Cooled Surelok™ style 1/4"BSP Gas, QF 8.9mm water feed and return, 7 pin quick fit switch plug with small collet body starter kit 1.6mm-1/16".

Step 1	Step 2	Step 3	Step 4	Step 5	Step 6	Step 7	Step 8	Step 9
Torch Model	Switch Option	Cable Length	Power Connections	Water Feed Hose	Water Return Hose	Gas Hose	Switch Plug	Starter Kit

Code	Description
Liquid-Cooled	
T1WLT	225A DC
T1W	330A DC
T3W	400A DC
T4W	450A DC
T5W	550A DC
T1WFX	330A DC Flex
T1WFXLT	225A DC Flex
T3WFX	400A DC Flex
T4WFX	450A DC Flex
T5WFX	550A DC Flex

Code	Description
S0	Blank Kit
S1	Momentary Kit
S3	3 Button Momentary Kit
1KH	1 Button Momentary+1k Pot
2KH	1 Button Momentary+5k Pot
3KH	1 Button Momentary+10k Pot
4KH	1 Button Momentary+25k Pot
1TH	Maintained Switch+1k Pot
2TH	Maintained Switch+5k Pot
3TH	Maintained Switch+10k Pot
4TH	Maintained Switch+25k Pot
RK2	2 Button Rocker Switch Kit
RK4	4 Button Rocker Switch Kit
*DM3	Digital Control Module

*Requires digital software systems integration

Power Connections

Code	Description
SL1625	Small Dinse Surelok™ Style
SL	Large Dinse Surelok™ Style

 # Water Feed Hose - Rapid Fit

Code	Description
QWF0	Open
QWF1	Water Feed Hose c/w 8.9mm Quick Fit
QWF2	Water Feed Hose c/w 5/8" UNF LH
QWF3	Water Feed Hose c/w 3/8" BSP
QWF4	Water Feed Hose c/w M12 x 1.0

 # Water Return Hose - Rapid Fit

Code	Description
QWR0	Open
QWR1	Water Return Hose c/w 8.9mm Quick Fit
QWR2	Water Return Hose c/w 5/8" UNF LH
QWR3	Water Return Hose c/w 3/8" BSP
QWR4	Water Return Hose c/w M12 x 1.0

Code	Description
4m	12.5ft Cable
8m	25ft Cable

 # Gas Supply Hose - Rapid Fit

Code	Description
QGS0	Open
QGS1	Gas Supply Hose c/w 3/8" BSP
QGS2	Gas Supply Hose c/w 5.0mm Quick Fit
QGS3	Gas Supply Hose c/w 5.95mm Quick Fit
QGS4	Gas Supply Hose c/w 8.9mm Quick Fit
QGS5	Gas Supply Hose c/w 1/4" BSP
QGS6	Gas Supply Hose c/w M10 x 1.0
QGS7	Gas Supply Hose c/w 5/8" UNF RH
QGS8	Gas Supply Hose c/w M12 x 1.0
QGS9	Gas Supply Hose c/w 1/8" BSP

Code	Description
ATP0	Blank
ATP1	7 Pin Uniarc Quick Fit
ATP2	5 Pin Tuchel Plug Quick Fit
ATP3	3 Pin XS12 Series Plug Quick Fit
ATP4	5 Pin Amphenol Plug Quick Fit
ATP5	6 Pin Amphenol Plug Quick Fit
ATP6	7 Pin WS16 Series Plug Quick Fit
ATP7	14 Pin Amphenol Plug Quick Fit
ATP8	9 Pin SP21 Series Plug Quick Fit
ATP9	5 Pin WS16 Series Plug Quick Fit
ATP10	9 Pin Tuchel Plug Quick Fit
ATP15	7 Pin Amphenol Plug Quick Fit

Starter Kit

Please refer to Page 50 for starter kits

The design, manufacturing and quality systems of Arc Torchology are certified by **BVQI** in accordance with EN/ISO 9001:2015

Surelok™ GT Air-Cooled Terminations

Step 1	Step 2	Step 3	Step 4	Step 5	Step 6
Torch Model	Switch Option	Cable Length	Power Connections	Switch Plug	Starter Kit

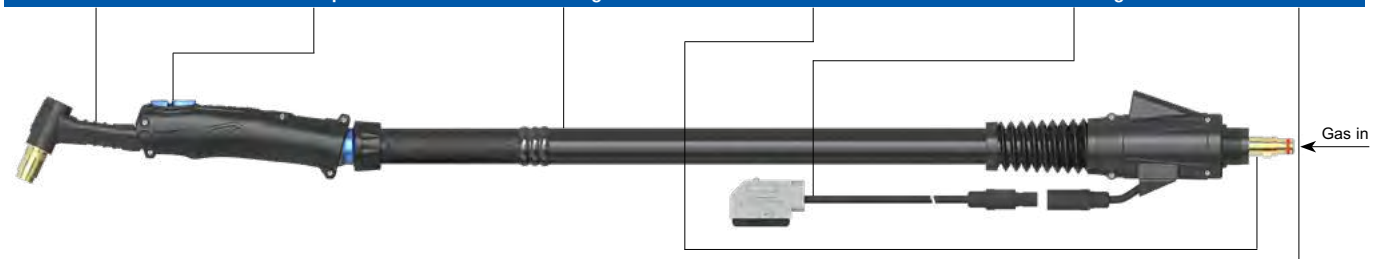

How to Order

To order your Arc Tig Torch please follow the simple 6 stage process below:

1. Select the torch model
2. Select the switch option
3. Select the length of cable
4. Select the power connection
5. Select the quick fit switch plug
6. Select the starter kit

Example:

T2-S1-4M-GT-ATP1/SCB2

T2 Arc Tig Torch x 12.5ft with momentary switch, large Dinse Air-Cooled Surelok™ GT Gas Through style and 7 pin quick fit switch plug with small collet body starter kit 1.6mm-1/16".

Step 1	Step 2	Step 3	Step 4	Step 5	Step 6
Torch Model	Switch Option	Cable Length	Power Connections	Switch Plug	Starter Kit

Code	Description
Air-Cooled	
T1	140A DC
T1FX	140A DC Flex
T2	190A DC
T2FX	180A DC Flex
T3	240A DC
T3FX	220A DC Flex

Code	Description
4m	12.5ft Cable
8m	25ft Cable

Power Connections

Code	Description
GT	Large Dinse Gas Through Surelok™ Style

Code	Description
ATP0	Blank
ATP10	9 Pin Tuchel Plug Quick Fit

Starter Kit

Please refer to Page 50 for starter kits

Code	Description
S0	Blank Kit
S1	Momentary Kit
S3	3 Button Momentary Kit
1KH	1 Button Momentary+1k Pot
2KH	1 Button Momentary+5k Pot
3KH	1 Button Momentary+10k Pot
4KH	1 Button Momentary+25k Pot
1TH	Maintained Switch+1k Pot
2TH	Maintained Switch+5k Pot
3TH	Maintained Switch+10k Pot
4TH	Maintained Switch+25k Pot
RK2	2 Button Rocker Switch Kit
RK4	4 Button Rocker Switch Kit
*DM3	Digital Control Module

*Requires digital software systems integration

TORCH PACKAGE CONFIGURATORS

arc TORCHOLOGY INTELLIGENT TORCH SOLUTIONS | MAKE WORK LIFE EASIER

Surelok™ GT Liquid-Cooled Terminations

Step 1	Step 2	Step 3	Step 4	Step 5	Step 6	Step 7	Step 8
Torch Model	Switch Option	Cable Length	Power Connections	Water Feed Hose	Water Return Hose	Switch Plug	Starter Kit

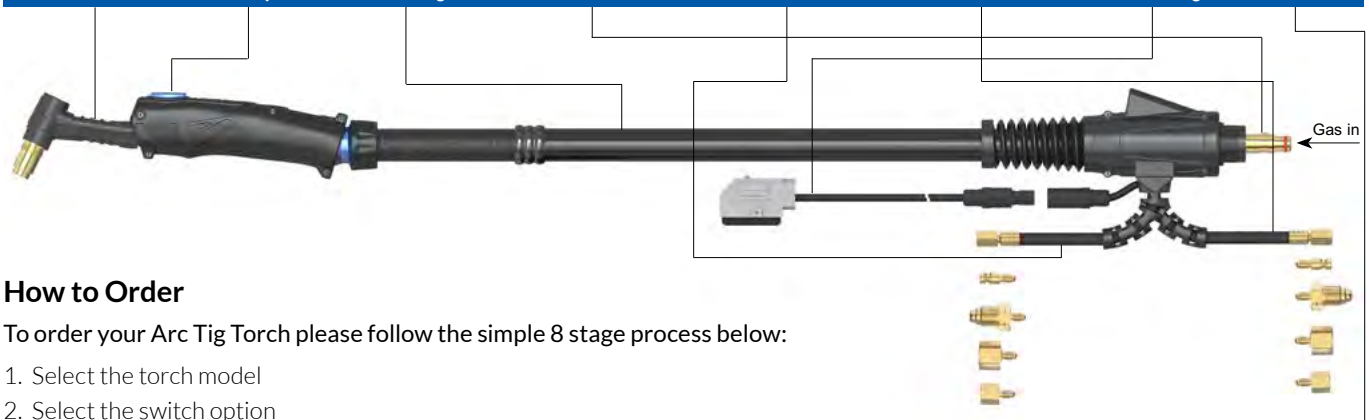

How to Order

To order your Arc Tig Torch please follow the simple 8 stage process below:

1. Select the torch model
2. Select the switch option
3. Select the length of cable
4. Select the power connection
5. Select the rapid fit water feed connection
6. Select the rapid fit water return connection
7. Select the quick fit switch plug
8. Select the starter kit

Example:

T3W-S1-4M-GT-QWF1-QWR1-ATP1/MCB2

T3W Arc Tig Torch x 12.5ft with momentary switch, large Dinse Liquid-Cooled Surelok™ GT Gas Through Style , QF 8.9mm water feed and return, 7 pin quick fit switch plug with medium collet body starter kit 1.6mm-1/16".

Step 1	Step 2	Step 3	Step 4	Step 5	Step 6	Step 7	Step 8
Torch Model	Switch Option	Cable Length	Power Connections	Water Feed Hose	Water Return Hose	Switch Plug	Starter Kit

Code	Description
Liquid-Cooled	
T1WLT	225A DC
T1W	330A DC
T3W	400A DC
T4W	450A DC
T5W	550A DC
T1WFX	330A DC Flex
T1WFXLT	225A DC Flex
T3WFX	400A DC Flex
T4WFX	450A DC Flex
T5WFX	550A DC Flex

Code	Description
S0	Blank Kit
S1	Momentary Kit
S3	3 Button Momentary Kit
1KH	1 Button Momentary+1k Pot
2KH	1 Button Momentary+5k Pot
3KH	1 Button Momentary+10k Pot
4KH	1 Button Momentary+25k Pot
1TH	Maintained Switch+1k Pot
2TH	Maintained Switch+5k Pot
3TH	Maintained Switch+10k Pot
4TH	Maintained Switch+25k Pot
RK2	2 Button Rocker Switch Kit
RK4	4 Button Rocker Switch Kit
*DM3	Digital Control Module

*Requires digital software systems integration

Power Connections

Code	Description
GT	Large Dinse Gas Through Surelok™ Style

 # Water Feed Hose - Rapid Fit

Code	Description
QWF0	Open
QWF1	Water Feed Hose c/w 8.9mm Quick Fit
QWF2	Water Feed Hose c/w 5/8" UNF LH
QWF3	Water Feed Hose c/w 3/8" BSP
QWF4	Water Feed Hose c/w M12 x 1.0

 # Water Return Hose - Rapid Fit

Code	Description
QWR0	Open
QWR1	Water Return Hose c/w 8.9mm Quick Fit
QWR2	Water Return Hose c/w 5/8" UNF LH
QWR3	Water Return Hose c/w 3/8" BSP
QWR4	Water Return Hose c/w M12 x 1.0

Code	Description
4m	12.5ft Cable
8m	25ft Cable

Code	Description
ATP0	Blank
ATP10	9 Pin Tuchel Plug Quick Fit

Starter Kit

Please refer to Page 50 for starter kits

Surelok™ QD Air-Cooled Terminations

Step 1	Step 2	Step 3	Step 4	Step 5	Step 6
Torch Model	Switch Option	Cable Length	Power Connections	Switch Plug	Starter Kit

How to Order

To order your Arc Tig Torch please follow the simple 6 stage process below:

1. Select the torch model
2. Select the switch option
3. Select the length of cable
4. Select the power connection
5. Select the quick fit switch plug
6. Select the starter kit

Example:

T2-S1-4M-QD1-ATP1/MCB2

T2 Arc Tig Torch x 12.5ft with momentary switch, Air-Cooled Surelok™ QD Gas Through 1/4"BSP and 7 pin quick fit switch plug with medium collet body starter kit 1.6mm-1/16".

Step 1	Step 2	Step 3	Step 4	Step 5	Step 6
Torch Model	Switch Option	Cable Length	Power Connections	Switch Plug	Starter Kit

Code	Description
Air-Cooled	
T1	140A DC
T1FX	140A DC Flex
T2	190A DC
T2FX	180A DC Flex
T3	240A DC
T3FX	220A DC Flex

Code	Description
S0	Blank Kit
S1	Momentary Kit
S3	3 Button Momentary Kit
1KH	1 Button Momentary+1k Pot
2KH	1 Button Momentary+5k Pot
3KH	1 Button Momentary+10k Pot
4KH	1 Button Momentary+25k Pot
1TH	Maintained Switch+1k Pot
2TH	Maintained Switch+5k Pot
3TH	Maintained Switch+10k Pot
4TH	Maintained Switch+25k Pot
RK2	2 Button Rocker Switch Kit
RK4	4 Button Rocker Switch Kit
*DM3	Digital Control Module

*Requires digital software systems integration

Code	Description
4m	12.5ft Cable
8m	25ft Cable

Power Connections

Code	Description
QD1	Surelok™ QD 1/4"BSP
QD2	Surelok™ QD 3/8"BSP
QD3	Surelok™ QD M12 x 1.0
QD4	Surelok™ QD M16 x 1.5

Code	Description
ATP0	Blank
ATP1	7 Pin Uniarc Quick Fit
ATP2	5 Pin Tuchel Plug Quick Fit
ATP3	3 Pin XS12 Series Plug Quick Fit
ATP4	5 Pin Amphenol Plug Quick Fit
ATP5	6 Pin Amphenol Plug Quick Fit
ATP6	7 Pin WS16 Series Plug Quick Fit
ATP7	14 Pin Amphenol Plug Quick Fit
ATP8	9 Pin SP21 Series Plug Quick Fit
ATP9	5 Pin WS16 Series Plug Quick Fit
ATP10	9 Pin Tuchel Plug Quick Fit
ATP15	7 Pin Amphenol Plug Quick Fit

Starter Kit

Please refer to Page 50 for starter kits

TORCH PACKAGE CONFIGURATORS

arc TORCHOLOGY INTELLIGENT TORCH SOLUTIONS | MAKE WORK LIFE EASIER

Surelok™ QD Liquid-Cooled Terminations

Step 1	Step 2	Step 3	Step 4	Step 5	Step 6	Step 7	Step 8
Torch Model	Switch Option	Cable Length	Power Connections	Water Feed Hose	Gas Hose	Switch Plug	Starter Kit

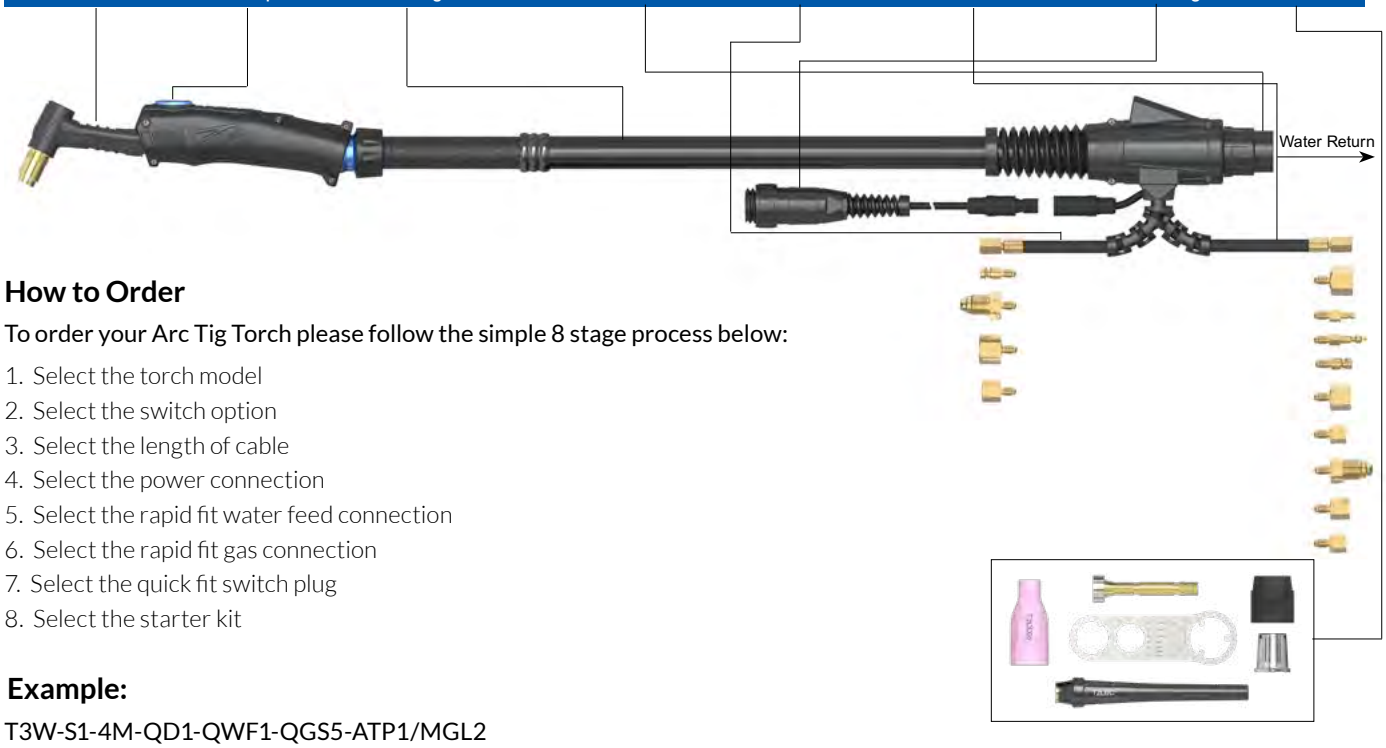

How to Order

To order your Arc Tig Torch please follow the simple 8 stage process below:

1. Select the torch model
2. Select the switch option
3. Select the length of cable
4. Select the power connection
5. Select the rapid fit water feed connection
6. Select the rapid fit gas connection
7. Select the quick fit switch plug
8. Select the starter kit

Example:

T3W-S1-4M-QD1-QWF1-QGS5-ATP1/MGL2

T3W Arc Tig Torch x 12.5ft with momentary switch, Liquid-Cooled Surelok™ QD 1/4"BSP, QF 8.9mm water feed, 1/4" BSP Gas Supply, 7 pin quick fit switch plug with medium gas lens body starter kit 1.6mm-1/16".

Step 1	Step 2	Step 3	Step 4	Step 5	Step 6	Step 7	Step 8
Torch Model	Switch Option	Cable Length	Power Connections	Water Feed Hose	Gas Hose	Switch Plug	Starter Kit

Code	Description
Liquid-Cooled	
T1WLT	225A DC
T1W	330A DC
T3W	400A DC
T4W	450A DC
T5W	550A DC
T1WFX	330A DC Flex
T1WFXLT	225A DC Flex
T3WFX	400A DC Flex
T4WFX	450A DC Flex
T5WFX	550A DC Flex

Code	Description
S0	Blank Kit
S1	Momentary Kit
S3	3 Button Momentary Kit
1KH	1 Button Momentary+1k Pot
2KH	1 Button Momentary+5k Pot
3KH	1 Button Momentary+10k Pot
4KH	1 Button Momentary+25k Pot
1TH	Maintained Switch+1k Pot
2TH	Maintained Switch+5k Pot
3TH	Maintained Switch+10k Pot
4TH	Maintained Switch+25k Pot
RK2	2 Button Rocker Switch Kit
RK4	4 Button Rocker Switch Kit
*DM3	Digital Control Module

*Requires digital software systems integration

Code	Description
4m	12.5ft Cable
8m	25ft Cable

Power Connections

Code	Description
QD1	Surelok™ QD 1/4"BSP
QD2	Surelok™ QD 3/8"BSP
QD3	Surelok™ QD M12 x 1.0
QD4	Surelok™ QD M16 x 1.5

Water Feed Hose - Rapid Fit

Code	Description
QWF0	Open
QWF1	Water Feed Hose c/w 8.9mm Quick Fit
QWF2	Water Feed Hose c/w 5/8" UNF LH
QWF3	Water Feed Hose c/w 3/8" BSP
QWF4	Water Feed Hose c/w M12 x 1.0

Gas Supply Hose - Rapid Fit

Code	Description
QGS0	Open
QGS1	Gas Supply Hose c/w 3/8" BSP
QGS2	Gas Supply Hose c/w 5.0mm Quick Fit
QGS3	Gas Supply Hose c/w 5.95mm Quick Fit
QGS4	Gas Supply Hose c/w 8.9mm Quick Fit
QGS5	Gas Supply Hose c/w 1/4" BSP
QGS6	Gas Supply Hose c/w M10 x 1.0
QGS7	Gas Supply Hose c/w 5/8" UNF RH
QGS8	Gas Supply Hose c/w M12 x 1.0
QGS9	Gas Supply Hose c/w 1/8" BSP

Code	Description
ATP0	Blank
ATP1	7 Pin Uniarc Quick Fit
ATP2	5 Pin Tuchel Plug Quick Fit
ATP3	3 Pin XS12 Series Plug Quick Fit
ATP4	5 Pin Amphenol Plug Quick Fit
ATP5	6 Pin Amphenol Plug Quick Fit
ATP6	7 Pin WS16 Series Plug Quick Fit
ATP7	14 Pin Amphenol Plug Quick Fit
ATP8	9 Pin SP21 Series Plug Quick Fit
ATP9	5 Pin WS16 Series Plug Quick Fit
ATP10	9 Pin Tuchel Plug Quick Fit
ATP15	7 Pin Amphenol Plug Quick Fit

Starter Kit

Please refer to Page 50 for starter kits

The design, manufacturing and quality systems of Arc Torchology are certified by **BVQI** in accordance with EN/ISO 9001:2015

TORCH PACKAGE CONFIGURATORS

MAKE WORK LIFE EASIER

Surelok™ QD5 Liquid-Cooled Terminations

Step 1	Step 2	Step 3	Step 4	Step 5	Step 6	Step 7	Step 8
Torch Model	Switch Option	Cable Length	Power Connections	Water Feed Hose	Water Return Hose	Switch Plug	Starter Kit

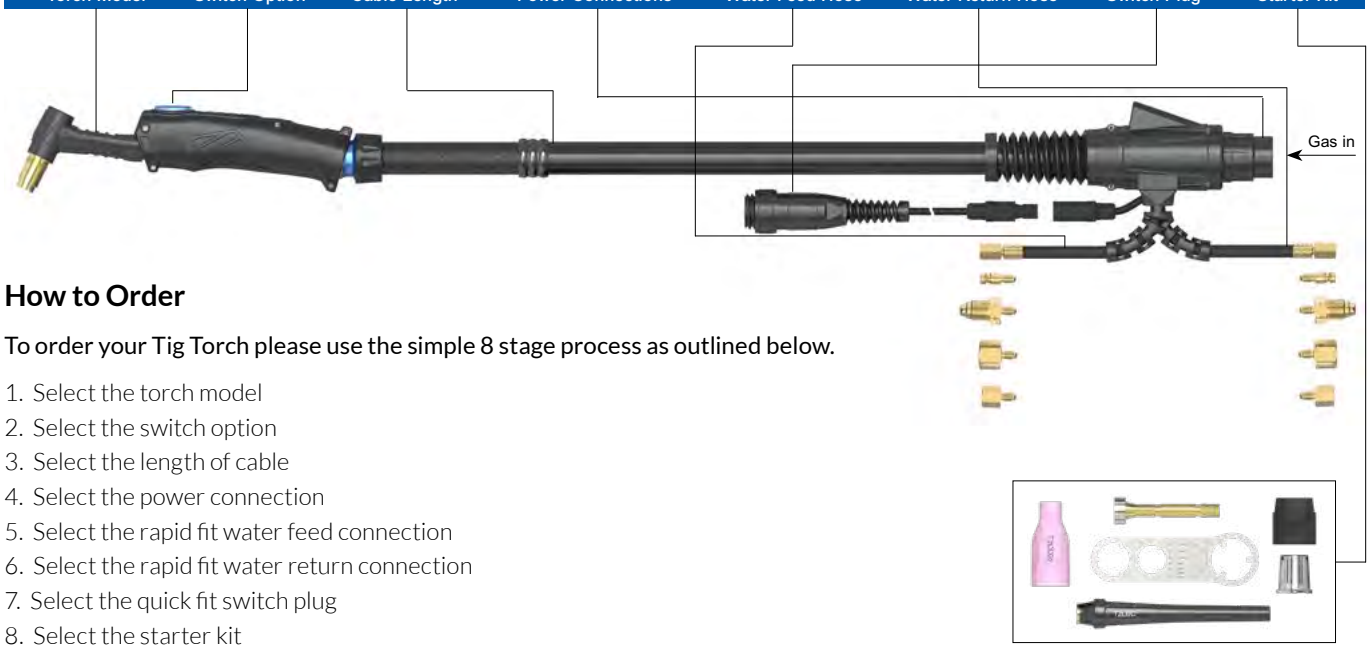

How to Order

To order your Tig Torch please use the simple 8 stage process as outlined below.

1. Select the torch model
2. Select the switch option
3. Select the length of cable
4. Select the power connection
5. Select the rapid fit water feed connection
6. Select the rapid fit water return connection
7. Select the quick fit switch plug
8. Select the starter kit

Example:

T3W-S1-4M-QD5-QWF1-QWR1-ATP1/LGL2

T3W Arc Tig Torch x 12.5ft with momentary switch, Liquid-Cooled Surelok™ QD5 1/4" BSP, QF 8.9mm water feed and return, 7 pin quick fit switch plug with large gas lens body starter kit 1.6mm-1/16".

Step 1	Step 2	Step 3	Step 4	Step 5	Step 6	Step 7	Step 8
Torch Model	Switch Option	Cable Length	Power Connections	Water Feed Hose	Water Return Hose	Switch Plug	Starter Kit

Code	Description
Liquid-Cooled	
T1WLT	225A DC
T1W	330A DC
T3W	400A DC
T4W	450A DC
T5W	550A DC
T1WFX	330A DC Flex
T1WFXLT	225A DC Flex
T3WFX	400A DC Flex
T4WFX	450A DC Flex
T5WFX	550A DC Flex

Code	Description
S0	Blank Kit
S1	Momentary Kit
S3	3 Button Momentary Kit
1KH	1 Button Momentary+1k Pot
2KH	1 Button Momentary+5k Pot
3KH	1 Button Momentary+10k Pot
4KH	1 Button Momentary+25k Pot
1TH	Maintained Switch+1k Pot
2TH	Maintained Switch+5k Pot
3TH	Maintained Switch+10k Pot
4TH	Maintained Switch+25k Pot
RK2	2 Button Rocker Switch Kit
RK4	4 Button Rocker Switch Kit
*DM3	Digital Control Module

*Requires digital software systems integration

Power Connections

Code	Description
QD5	Liquid-Cooled Surelok™ QD 1/4" BSP

 # Water Feed Hose - Rapid Fit

Code	Description
QWF0	Open
QWF1	Water Feed Hose c/w 8.9mm Quick Fit
QWF2	Water Feed Hose c/w 5/8" UNF LH
QWF3	Water Feed Hose c/w 3/8" BSP
QWF4	Water Feed Hose c/w M12 x 1.0

 # Water Return Hose - Rapid Fit

Code	Description
QWR0	Open
QWR1	Water Return Hose c/w 8.9mm Quick Fit
QWR2	Water Return Hose c/w 5/8" UNF LH
QWR3	Water Return Hose c/w 3/8" BSP
QWR4	Water Return Hose c/w M12 x 1.0

Code	Description
4m	12.5ft Cable
8m	25ft Cable

Code	Description
ATP0	Blank
ATP1	7 Pin Uniarc Quick Fit
ATP2	5 Pin Tuchel Plug Quick Fit
ATP3	3 Pin XS12 Series Plug Quick Fit
ATP4	5 Pin Amphenol Plug Quick Fit
ATP5	6 Pin Amphenol Plug Quick Fit
ATP6	7 Pin WS16 Series Plug Quick Fit
ATP7	14 Pin Amphenol Plug Quick Fit
ATP8	9 Pin SP21 Series Plug Quick Fit
ATP9	5 Pin WS16 Series Plug Quick Fit
ATP10	9 Pin Tuchel Plug Quick Fit
ATP15	7 Pin Amphenol Plug Quick Fit

Starter Kit

Please refer to Page 50 for starter kits

TORCH PACKAGE CONFIGURATORS

MAKE WORK LIFE EASIER

Surelok™ Liquid-Cooled Terminations

Step 1	Step 2	Step 3	Step 4	Step 5	Step 6	Step 7
Torch Model	Cable Length	Power Connections	Water Feed Hose	Water Return Hose	Gas Hose	Starter Kit

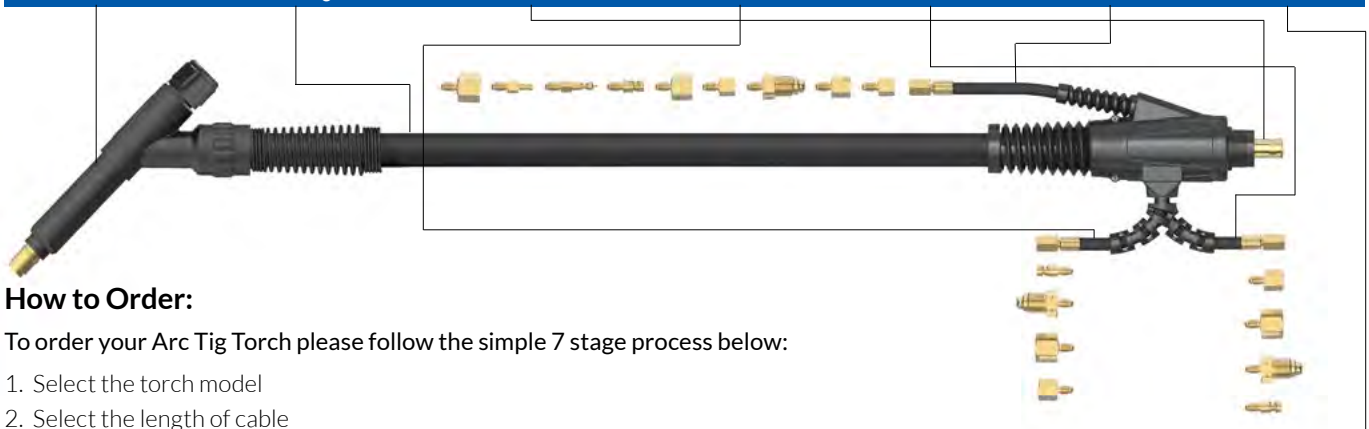

How to Order:

To order your Arc Tig Torch please follow the simple 7 stage process below:

1. Select the torch model
2. Select the length of cable
3. Select the power connection
4. Select the rapid fit water feed connection
5. Select the rapid fit water return connection
6. Select the rapid fit gas connection
7. Select the starter kit

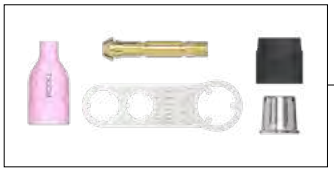

Example:

T5WA-4M-SL-QWF1-QWR1-QGS5-MCB2-AUTO

T5WA Arc Tig Auto Torch x 12.5ft ,Large Dinse Liquid-Cooled Surelok™ style 1/4"BSP Gas, QF 8.9mm water feed and return, with Auto Torch medium collet body starter kit 1.6mm-1/16''.

Step 1	Step 2	Step 3	Step 4	Step 5	Step 6	Step 7
Torch Model	Cable Length	Power Connections	Water Feed Hose	Water Return Hose	Gas Hose	Starter Kit

Code	Description
Liquid-Cooled	
T5WA	550A DC

Code	Description
4m	12.5ft Cable
8m	25ft Cable

Power Connections

Code	Description
SL1625	Small Dinse Surelok™ Style
SL	Large Dinse Surelok™ Style

 # Water Feed Hose - Rapid Fit

Code	Description
QWF0	Open
QWF1	Water Feed Hose c/w 8.9mm Quick Fit
QWF2	Water Feed Hose c/w 5/8" UNF LH
QWF3	Water Feed Hose c/w 3/8" BSP
QWF4	Water Feed Hose c/w M12 x 1.0

 # Water Return Hose - Rapid Fit

Code	Description
QWR0	Open
QWR1	Water Return Hose c/w 8.9mm Quick Fit
QWR2	Water Return Hose c/w 5/8" UNF LH
QWR3	Water Return Hose c/w 3/8" BSP
QWR4	Water Return Hose c/w M12 x 1.0

 # Gas Supply Hose - Rapid Fit

Code	Description
QGS0	Open
QGS1	Gas Supply Hose c/w 3/8" BSP
QGS2	Gas Supply Hose c/w 5.0mm Quick Fit
QGS3	Gas Supply Hose c/w 5.95mm Quick Fit
QGS4	Gas Supply Hose c/w 8.9mm Quick Fit
QGS5	Gas Supply Hose c/w 1/4" BSP
QGS6	Gas Supply Hose c/w M10 x 1.0
QGS7	Gas Supply Hose c/w 5/8" UNF RH
QGS8	Gas Supply Hose c/w M12 x 1.0
QGS9	Gas Supply Hose c/w 1/8" BSP

Starter Kit

Please refer to Page 50 for starter kits

Surelok™ GT Liquid-Cooled Terminations

Step 1	Step 2	Step 3	Step 4	Step 5	Step 6
Torch Model	Cable Length	Power Connections	Water Feed Hose	Water Return Hose	Starter Kit

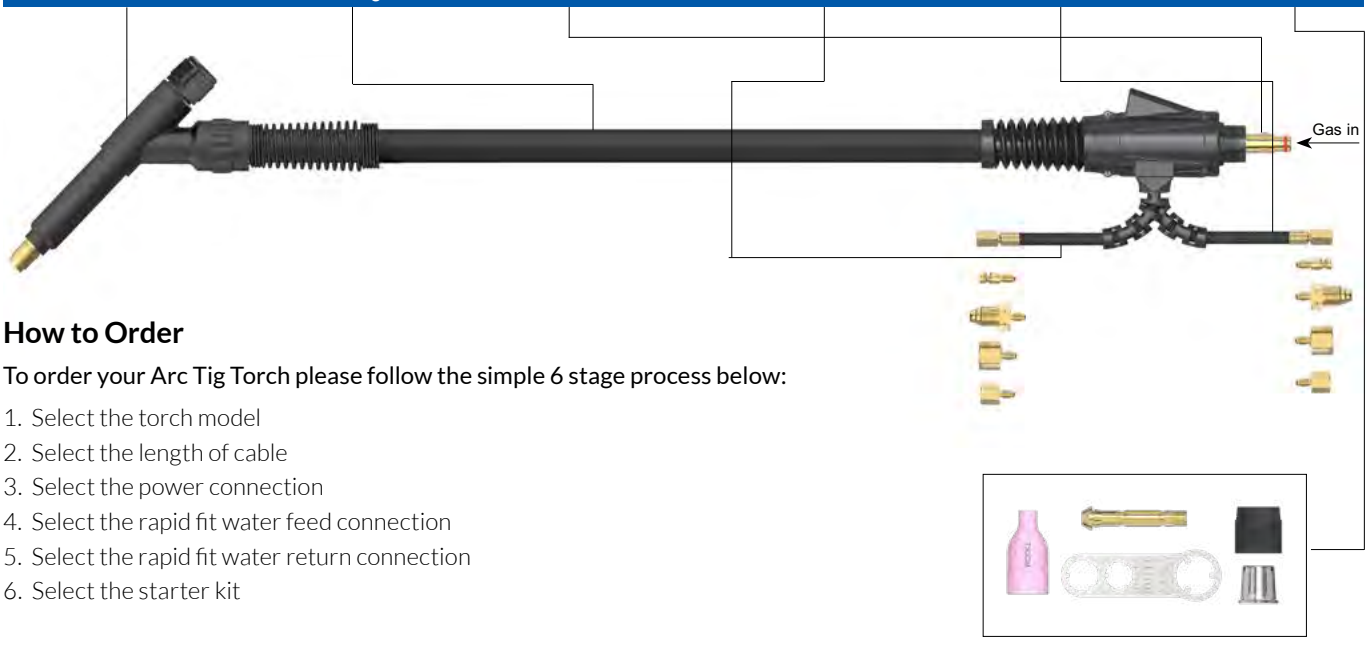

How to Order

To order your Arc Tig Torch please follow the simple 6 stage process below:

1. Select the torch model
2. Select the length of cable
3. Select the power connection
4. Select the rapid fit water feed connection
5. Select the rapid fit water return connection
6. Select the starter kit

Example:

T5WA-4M-GT-QWF1-QWR1-MCB2-AUTO

T5WA Arc Tig Auto Torch x 12.5ft, large Dinse Liquid-Cooled Surelok™ GT Gas Through Style , QF 8.9mm water feed and return, Auto Torch medium collet body starter kit 1.6mm-1/16".

Step 1	Step 2	Step 3	Step 4	Step 5	Step 6
Torch Model	Cable Length	Power Connections	Water Feed Hose	Water Return Hose	Starter Kit

Code	Description
Liquid-Cooled	
T5WA	550A DC

Power Connections

Code	Description
GT	Large Dinse Gas Through Surelok™ Style

 # Water Feed Hose - Rapid Fit

Code	Description
QWF0	Open
QWF1	Water Feed Hose c/w 8.9mm Quick Fit
QWF2	Water Feed Hose c/w 5/8" UNF LH
QWF3	Water Feed Hose c/w 3/8" BSP
QWF4	Water Feed Hose c/w M12 x 1.0

Code	Description
4m	12.5ft Cable
8m	25ft Cable

 # Water Return Hose - Rapid Fit

Code	Description
QWR0	Open
QWR1	Water Return Hose c/w 8.9mm Quick Fit
QWR2	Water Return Hose c/w 5/8" UNF LH
QWR3	Water Return Hose c/w 3/8" BSP
QWR4	Water Return Hose c/w M12 x 1.0

Starter Kit
Please refer to Page 50 for starter kits

TORCH PACKAGE CONFIGURATORS

MAKE WORK LIFE EASIER

Surelok™ QD Liquid-Cooled Terminations

Step 1	Step 2	Step 3	Step 4	Step 5	Step 6
Torch Model	Cable Length	Power Connections	Water Feed Hose	Gas Hose	Starter Kit

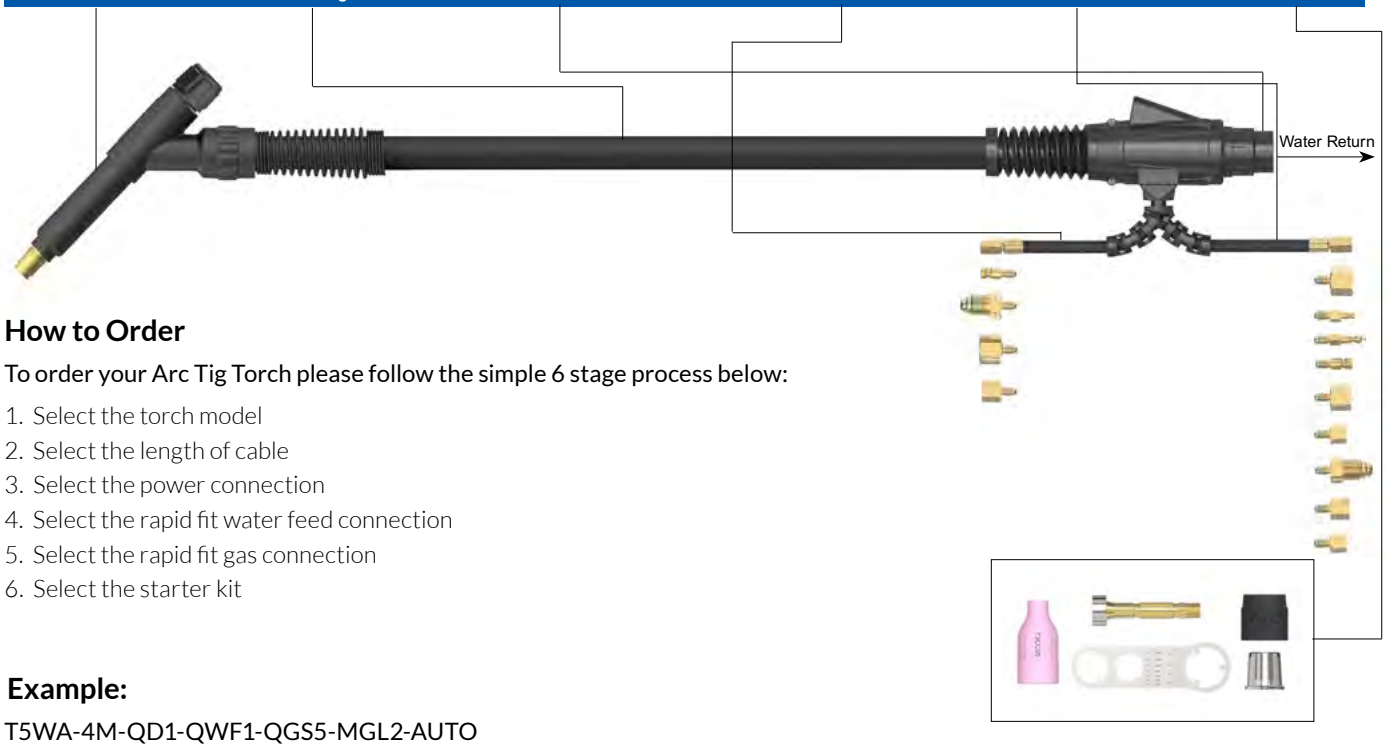

How to Order

To order your Arc Tig Torch please follow the simple 6 stage process below:

1. Select the torch model
2. Select the length of cable
3. Select the power connection
4. Select the rapid fit water feed connection
5. Select the rapid fit gas connection
6. Select the starter kit

Example:

T5WA-4M-QD1-QWF1-QGS5-MGL2-AUTO

T5WA Arc Tig Auto Torch x 12.5ft, Liquid-Cooled Surelok™ QD 1/4"BSP, QF 8.9mm water feed, 1/4" BSP Gas Supply, with Auto torch medium gas lens body starter kit 1.6mm-1/16".

Step 1	Step 2	Step 3	Step 4	Step 5	Step 6
Torch Model	Cable Length	Power Connections	Water Feed Hose	Gas Hose	Starter Kit

Code	Description
Liquid-Cooled	
T5WA	550A DC

Code	Description
4m	12.5ft Cable
8m	25ft Cable

Power Connections

Code	Description
QD1	Surelok™ QD 1/4"BSP
QD2	Surelok™ QD 3/8"BSP
QD3	Surelok™ QD M12 x 1.0
QD4	Surelok™ QD M16 x 1.5

 # Water Feed Hose - Rapid Fit

Code	Description
QWF0	Open
QWF1	Water Feed Hose c/w 8.9mm Quick Fit
QWF2	Water Feed Hose c/w 5/8" UNF LH
QWF3	Water Feed Hose c/w 3/8" BSP
QWF4	Water Feed Hose c/w M12 x 1.0

 # Gas Supply Hose - Rapid Fit

Code	Description
QGS0	Open
QGS1	Gas Supply Hose c/w 3/8" BSP
QGS2	Gas Supply Hose c/w 5.0mm Quick Fit
QGS3	Gas Supply Hose c/w 5.95mm Quick Fit
QGS4	Gas Supply Hose c/w 8.9mm Quick Fit
QGS5	Gas Supply Hose c/w 1/4" BSP
QGS6	Gas Supply Hose c/w M10 x 1.0
QGS7	Gas Supply Hose c/w 5/8" UNF RH
QGS8	Gas Supply Hose c/w M12 x 1.0
QGS9	Gas Supply Hose c/w 1/8" BSP

Starter Kit
Please refer to Page 50 for starter kits

Surelok™ QD5 Liquid-Cooled Terminations

Step 1	Step 2	Step 3	Step 4	Step 5	Step 6
Torch Model	Cable Length	Power Connections	Water Feed Hose	Water Return Hose	Starter Kit

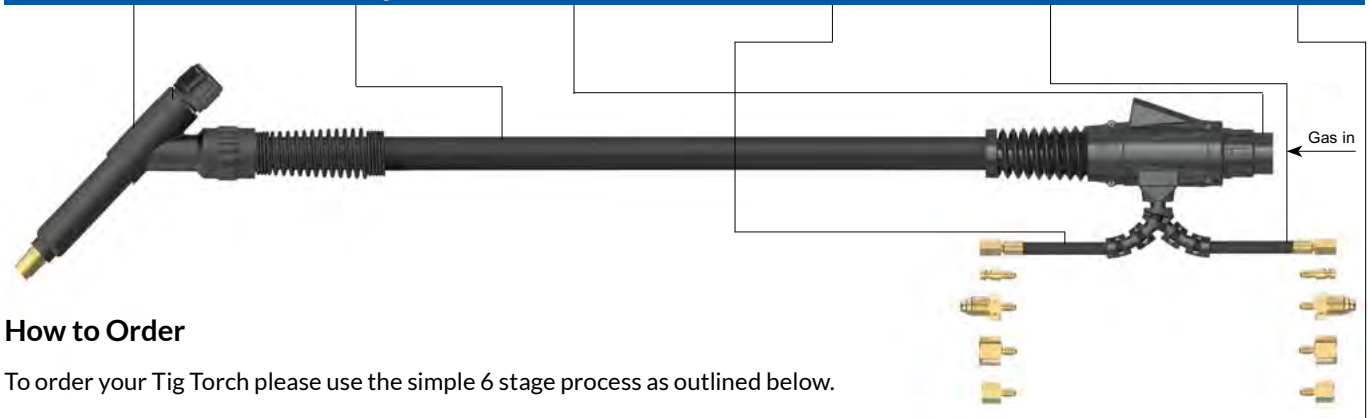

How to Order

To order your Tig Torch please use the simple 6 stage process as outlined below.

1. Select the torch model
2. Select the length of cable
3. Select the power connection
4. Select the rapid fit water feed connection
5. Select the rapid fit water return connection
6. Select the starter kit

Example:

T5WA-4M-QD5-QWF1-QWR1-LGL2-AUTO

T5WA Arc Tig Auto Torch x 12.5ft , Liquid-Cooled Surelok™ QD5 1/4" BSP, QF 8.9mm water feed and return, Auto Torch large gas lens body starter kit 1.6mm-1/16".

Step 1	Step 2	Step 3	Step 4	Step 5	Step 6
Torch Model	Cable Length	Power Connections	Water Feed Hose	Water Return Hose	Starter Kit

Code	Description
Liquid-Cooled	
T5WA	550A DC

Power Connections

Code	Description
QD5	Liquid-Cooled Surelok™ QD 1/4" BSP

 # Water Feed Hose - Rapid Fit

Code	Description
QWF0	Open
QWF1	Water Feed Hose c/w 8.9mm Quick Fit
QWF2	Water Feed Hose c/w 5/8" UNF LH
QWF3	Water Feed Hose c/w 3/8" BSP
QWF4	Water Feed Hose c/w M12 x 1.0

Code	Description
4m	12.5ft Cable
8m	25ft Cable

 # Water Return Hose - Rapid Fit

Code	Description
QWR0	Open
QWR1	Water Return Hose c/w 8.9mm Quick Fit
QWR2	Water Return Hose c/w 5/8" UNF LH
QWR3	Water Return Hose c/w 3/8" BSP
QWR4	Water Return Hose c/w M12 x 1.0

Starter Kit
Please refer to Page 50 for starter kits

AIR-COOLED CABLE EXTENSION CONFIGURATOR

arc TORCHOLOGY INTELLIGENT TORCH SOLUTIONS | MAKE WORK LIFE EASIER

Step 1	Step 2	Step 3	Step 4	Step 5
Cable Extension Length	Gas Hose	Switch Plug	Torch Side Connector Kit	Zipper Boot

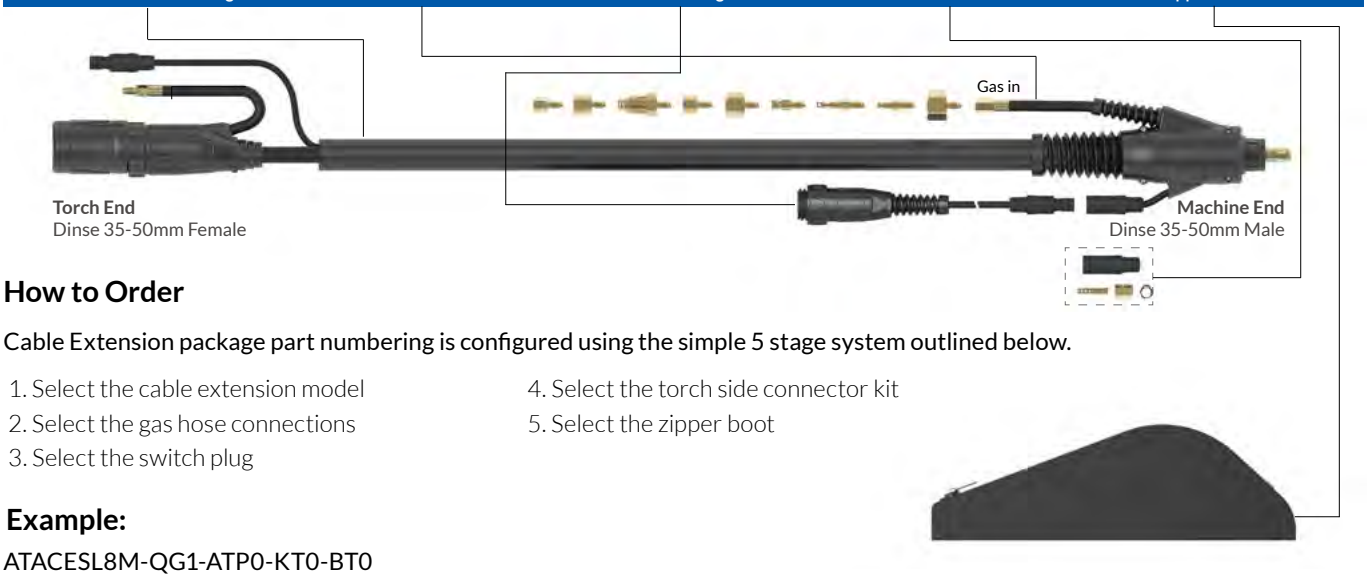

How to Order

Cable Extension package part numbering is configured using the simple 5 stage system outlined below.

1. Select the cable extension model
2. Select the gas hose connections
3. Select the switch plug
4. Select the torch side connector kit
5. Select the zipper boot

Example:

ATACESL8M-QG1-ATP0-KT0-BT0

Air-Cooled Extension Assembly Surelok End, Gas Hose 3/8" BSP x 8mt

Step 1	Step 2	Step 3	Step 4	Step 5
Cable Extension Length	Gas Hose	Switch Plug	Torch Side Connector Kit	Zipper Boot

Code	Description
ATACESL8M	Air-Cooled Cable Extension 8mt
ATACESL16M	Air-Cooled Cable Extension 16mt

Code	Description
QG0	Gas Hose c/w Universal Adapter
QG1	Gas Supply Hose c/w 3/8" BSP
QG2	Gas Supply Hose c/w 5.0mm Quick Fit
QG3	Gas Supply Hose c/w 5.95mm Quick Fit
QG4	Gas Supply Hose c/w 8.9mm Quick Fit
QG5	Gas Supply Hose c/w 1/4" BSP
QG6	Gas Supply Hose c/w M10 x 1.0
QG7	Gas Supply Hose c/w 5/8" UNF RH
QG8	Gas Supply Hose c/w M12 x 1.0
QG9	Gas Supply Hose c/w 1/8" BSP

Code	Description
ATP0	Blank
ATP1	7 Pin Uniarc Quick Fit
ATP2	5 Pin Tuchel Plug Quick Fit
ATP3	3 Pin XS12 Series Plug Quick Fit
ATP4	5 Pin Amphenol Plug Quick Fit
ATP5	6 Pin Amphenol Plug Quick Fit
ATP6	7 Pin WS16 Series Plug Quick Fit
ATP7	14 Pin Amphenol Plug Quick Fit
ATP8	9 Pin SP21 Series Plug Quick Fit
ATP9	5 Pin WS16 Series Plug Quick Fit
ATP10	9 Pin Tuchel Plug Quick Fit
ATP15	7 Pin Amphenol Plug Quick Fit

Code	Description
KT0	No Torch Side Connector Kit
KT1	Torch Side Connector Kit

Code	Description
BT0	No Zipper Boot
BT1	Zipper Boot

Technical Data

Cable Extension Length		8mt	8mt	16mt	16mt
Torch Length		4mt	8mt	8mt	16mt
Total Length		12mt	16mt	24mt	32mt
Cooling Method		Air-Cooled	Air-Cooled	Air-Cooled	Air-Cooled
Rating:	**DC**	200A	200A	200A	200A
	AC	140A	140A	140A	140A
Duty Cycle:		35%	35%	35%	35%

LIQUID-COOLED CABLE EXTENSION CONFIGURATOR

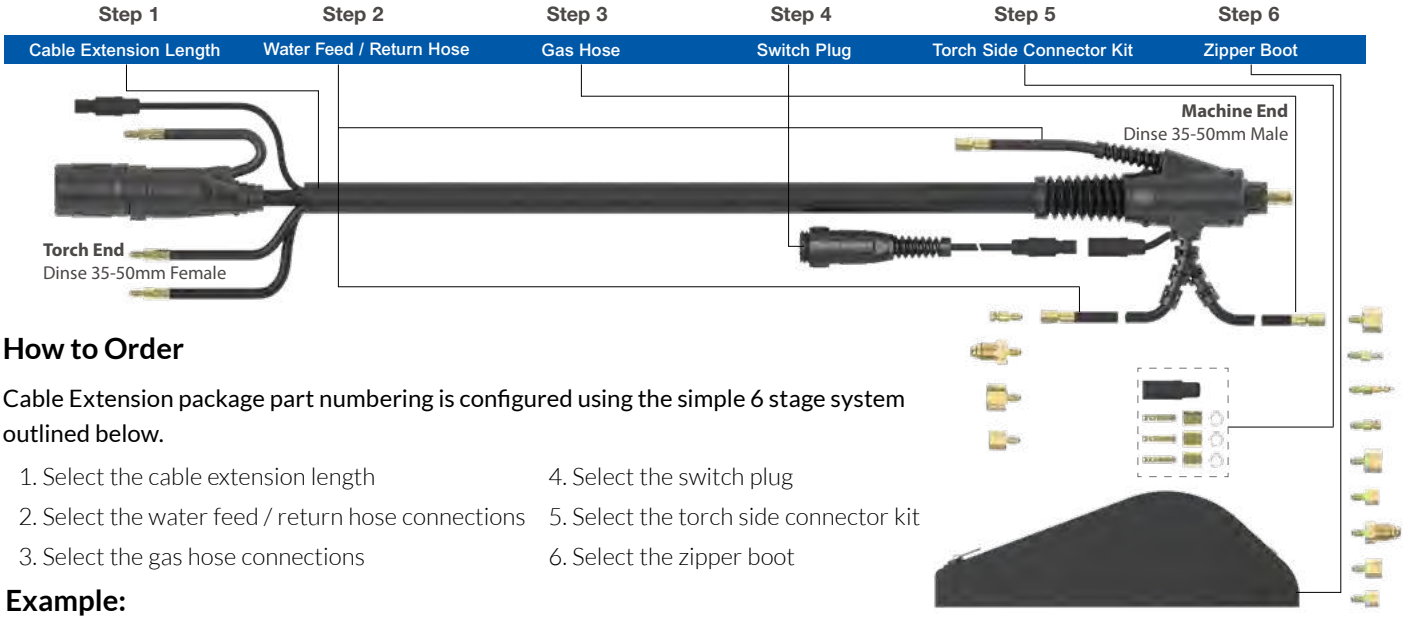

How to Order

Cable Extension package part numbering is configured using the simple 6 stage system outlined below.

1. Select the cable extension length
2. Select the water feed / return hose connections
3. Select the gas hose connections
4. Select the switch plug
5. Select the torch side connector kit
6. Select the zipper boot

Example:

ATWCESL8M-QW3-QG1-ATP0-KT0-BT0

Liquid-Cooled Cable Extension Assembly Surelok End, Water Hose 3/8" BSP, Gas Hose 3/8" BSP x 8mt

Step 1 – Cable Extension Length

Code	Description
ATWCESL8M	Liquid-Cooled Cable Extension 8mt
ATWCESL16M	Liquid-Cooled Cable Extension 16mt

Step 2 – Water Feed / Return Hose

Code	Description
QW0	Water Hose Universal Adapter
QW1	Water Hose c/w 8.9mm Quick Fit
QW2	Water Hose c/w 5/8" UNF LH
QW3	Water Hose c/w 3/8" BSP
QW4	Water Hose c/w M12 x 1.0

Step 3 – Gas Hose

Code	Description
QG0	Gas Hose c/w Universal Adapter
QG1	Gas Supply Hose c/w 3/8" BSP
QG2	Gas Supply Hose c/w 5.0mm Quick Fit
QG3	Gas Supply Hose c/w 5.95mm Quick Fit
QG4	Gas Supply Hose c/w 8.9mm Quick Fit
QG5	Gas Supply Hose c/w 1/4" BSP
QG6	Gas Supply Hose c/w M10 x 1.0
QG7	Gas Supply Hose c/w 5/8" UNF RH
QG8	Gas Supply Hose c/w M12 x 1.0
QG9	Gas Supply Hose c/w 1/8" BSP

Step 5 – Torch Side Connector Kit

Code	Description
KT0	No Torch Side Connector Kit
KT1	Torch Side Connector Kit

Step 6 – Zipper Boot

Code	Description
BT0	No Zipper Boot
BT1	Zipper Boot

Step 4 – Switch Plug

Code	Description	Code	Description	Code	Description
ATP0	Blank	ATP4	5 Pin Amphenol Plug Quick Fit	ATP8	9 Pin SP21 Series Plug Quick Fit
ATP1	7 Pin Uniarc Quick Fit	ATP5	6 Pin Amphenol Plug Quick Fit	ATP9	5 Pin WS16 Series Plug Quick Fit
ATP2	5 Pin Tuchel Plug Quick Fit	ATP6	7 Pin WS16 Series Plug Quick Fit	ATP10	9 Pin Tuchel Plug Quick Fit
ATP3	3 Pin XS12 Series Plug Quick Fit	ATP7	14 Pin Amphenol Plug Quick Fit	ATP15	7 Pin Amphenol Plug Quick Fit

Technical Data

Cable Extension Length		8mt	8mt	16mt	16mt
Torch Length		4mt	8mt	8mt	16mt
Total Length		12mt	16mt	24mt	32mt
Cooling Method		Liquid-Cooled	Liquid-Cooled	Liquid-Cooled	Liquid-Cooled
Rating:	**DC**	540A	480A	400A	350A
	AC	375A	335A	280A	245A
Duty Cycle:		60%	60%	60%	60%
Minimum Water Flow		1.6 l/min	1.5 l/min	1.2 l/min	1.2 l/min
Minimum Water Inlet Pressure		2.5 Bar	2.5 Bar	2.5 Bar	2.5 Bar
Minimum Cooling Requirements		1600W	1600W	1600W	1600W
Maximum Water Inlet Pressure		5.0 Bar	5.0 Bar	5.0 Bar	5.0 Bar
Maximum Water Inlet Temperature		50°C	50°C	50°C	50°C

WEAR PARTS SET-UP OVERVIEW

T1/T1W Series

Standard Nozzle Collet Body Set-Up

Recommended Set-up Parameters for Steel and Aluminium

Nozzle Size	Bore Size	Suggested Gas Flow Rate	Maximum Tungsten Stick-out	Ceramic Nozzle	Quartz Option	Tungsten Size 1.0	1.6	2.4	3.2	4.0	4.8	6.4
4	6mm 1/4"	6 l/min	8mm	●	○	●	●	○	○	○	○	○
5	8mm 5/16"	6 l/min	8mm	●	○	●	●	○	○	○	○	○
6	10mm 3/8"	7 l/min	10mm	●	●	○	●	●	○	○	○	○
7	11mm 7/16"	8 l/min	10mm	●	○	○	○	●	●	○	○	○
8	12mm 1/2"	8 l/min	10mm	●	●	○	○	●	●	●	○	○
10	15mm 5/8"	10 l/min	13mm	●	●	○	○	○	○	●	○	○

Note: Maximum recommended tungsten for Quartz option is 3.2mm.
Quartz cups can be used for Aluminium welding but only in short runs
Please refer to Page 68 for recommended Tungsten parameters.

Standard Nozzle Gas Lens Collet Body Set-Up

Recommended Set-up Parameters for Stainless Steel, Steel and Aluminium

Nozzle Size	Bore Size	Suggested Gas Flow Rate	Maximum Tungsten Stick-out	Ceramic Nozzle	Quartz Option	Tungsten Size 1.0	1.6	2.4	3.2	4.0	4.8	6.4
4	6mm 1/4"	5 l/min	10mm	●	○	●	●	○	○	○	○	○
5	8mm 5/16"	6 l/min	10mm	●	○	●	●	○	○	○	○	○
6	10mm 3/8"	7 l/min	13mm	●	●	○	●	●	○	○	○	○
7	11mm 7/16"	8 l/min	14mm	●	○	○	○	●	●	○	○	○
8	12mm 1/2"	8 l/min	15mm	●	●	○	○	●	●	●	○	○
10	15mm 5/8"	10 l/min	15mm	●	●	○	○	○	○	●	○	○

Note: Maximum recommended tungsten for Quartz option is 3.2mm.
Quartz cups can be used for Aluminium welding but only in short runs
Please refer to Page 68 for recommended Tungsten parameters.

Short Nozzle Collet Body Set-up

Recommended Set-up Parameters for Steel and Aluminium

Nozzle Size	Bore Size	Suggested Gas Flow Rate	Maximum Tungsten Stick-out	Ceramic Nozzle	Quartz Option	Tungsten Size 1.0	1.6	2.4	3.2	4.0	4.8	6.4
5	8mm 5/16"	6 l/min	8mm	●	○	●	●	○	○	○	○	○
7	11mm 7/16"	8 l/min	8mm	●	○	○	○	●	●	○	○	○
10	15mm 5/8"	10 l/min	10mm	●	○	○	○	○	○	●	○	○

Short Nozzle Gas Lens Collet Body Set-Up

Recommended Set-up Parameters for Stainless Steel, Steel and Aluminium

Nozzle Size	Bore Size	Suggested Gas Flow Rate	Maximum Tungsten Stick-out	Ceramic Nozzle	Quartz Option	Tungsten Size 1.0	1.6	2.4	3.2	4.0	4.8	6.4
5	8mm 5/16"	6 l/min	10mm	●	○	●	●	○	○	○	○	○
7	11mm 7/16"	8 l/min	10mm	●	○	○	○	●	●	○	○	○
10	15mm 5/8"	10 l/min	10mm	●	○	○	○	○	○	●	○	○

WEAR PARTS SET-UP OVERVIEW

T1/T1W Series

Super Series Nozzle Super Series Gas Lens Collet Body Set-up

Recommended Set-up Parameters for Stainless Steel, Steel, Aluminium and Titanium

Nozzle Size	Bore Size	Suggested Gas Flow Rate	Maximum Tungsten Stick-out	Ceramic Nozzle	Quartz Option	Tungsten Size 1.0	1.6	2.4	3.2	4.0	4.8	6.4
12	20mm 3/4"	12 l/min	25mm	●	●	○	●	●	●	○	○	○
14	23mm 15/16"	12 l/min	25mm	●	●	○	●	●	●	○	○	○
18	28mm 1-1/10"	15 l/min	35mm	●	●	○	●	●	●	○	○	○

Note: Maximum recommended tungsten for Quartz option is 3.2mm.
The Tungsten stick out should be minimum 10mm for aluminium welding
Quartz cups can be used for Aluminium welding but only in short runs
150A DC max amps with 1/16"-1.6mm tungsten.
200A DC max amps with 3/32"-2.4mm tungsten.
240A DC max amps with 1/8"-3.2mm tungsten.
Prevent arc starting from gauze.
Start arc at low Amp.
Please refer to Page 68 for recommended Tungsten parameters.

T2/T3W/T4W

Standard Nozzle Collet Body Set-Up

Recommended Set-up Parameters for Steel and Aluminium

Nozzle Size	Bore Size	Suggested Gas Flow Rate	Maximum Tungsten Stick-out	Ceramic Nozzle	Quartz Option	Tungsten Size 1.0	1.6	2.4	3.2	4.0	4.8	6.4
4	6mm 1/4"	6 l/min	10mm	●	○	●	●	○	○	○	○	○
5	8mm 5/16"	6 l/min	10mm	●	○	●	●	○	○	○	○	○
6	10mm 3/8"	7 l/min	11mm	●	●	○	●	●	○	○	○	○
7	11mm 7/16"	7 l/min	12mm	●	○	○	○	●	●	○	○	○
8	12mm 1/2"	10 l/min	13mm	●	●	○	○	●	●	●	○	○
10	15mm 5/8"	12 l/min	15mm	●	●	○	○	○	○	●	●	○

Note: Maximum recommended tungsten for Quartz option is 3.2mm.
Quartz cups can be used for Aluminium welding but only in short runs
Please refer to Page 68 for recommended Tungsten parameters.

Standard Nozzle Gas Lens Collet Body Set-Up

Recommended Set-up Parameters for Stainless Steel, Steel and Aluminium

Nozzle Size	Bore Size	Suggested Gas Flow Rate	Maximum Tungsten Stick-out	Ceramic Nozzle	Quartz Option	Tungsten Size 1.0	1.6	2.4	3.2	4.0	4.8	6.4
4	6mm 1/4"	5 l/min	10mm	●	○	●	●	○	○	○	○	○
5	8mm 5/16"	6 l/min	10mm	●	○	●	●	○	○	○	○	○
6	10mm 3/8"	7 l/min	13mm	●	●	○	●	●	○	○	○	○
7	11mm 7/16"	7 l/min	14mm	●	○	○	○	●	●	○	○	○
8	12mm 1/2"	8 l/min	15mm	●	●	○	○	●	●	●	○	○
10	15mm 5/8"	10 l/min	20mm	●	●	○	○	○	○	●	●	○

Note: Maximum recommended tungsten for Quartz option is 3.2mm.
Quartz cups can be used for Aluminium welding but only in short runs
Please refer to Page 68 for recommended Tungsten parameters.

WEAR PARTS SET-UP OVERVIEW

T2/T3W/T4W

Super Series Nozzle Super Series Gas Lens Collet Body Set-Up

Recommended Set-up Parameters for Titanium, Stainless Steel, Steel, Aluminium

Nozzle Size	Bore Size	Suggested Gas Flow Rate	Maximum Tungsten Stick-out	Ceramic Nozzle	Quartz Option	Tungsten Size 1.0	1.6	2.4	3.2	4.0	4.8	6.4
12	20mm 3/4"	12 l/min	25mm	●	●	○	●	●	●	○	○	○
14	23mm 15/16"	12 l/min	25mm	●	●	○	●	●	●	○	○	○
18	28mm 1-1/10"	15 l/min	35mm	●	●	○	●	●	●	●	●	○
24	38mm 1-1/2"	20 l/min	55mm	●	○	○	●	●	●	●	●	○

Note: Maximum recommended tungsten for Quartz option is 3.2mm.
The Tungsten stick out should be minimum 10mm for Aluminium welding
Quartz cups can be used for Aluminium welding but only in short runs
150A DC max amps with 1/16"-1.6mm tungsten.
200A DC max amps with 3/32"-2.4mm tungsten.
240A DC max amps with 1/8"-3.2mm tungsten.
Prevent arc starting from gauze.
Start arc at low amp.
Please refer to Page 68 for recommended Tungsten parameters..

T3/T5W/T5WA

Standard Nozzle Collet Body Set-Up

Recommended Set-up Parameters for Steel and Aluminium

Nozzle Size	Bore Size	Suggested Gas Flow Rate	Maximum Tungsten Stick-out	Ceramic Nozzle	Quartz Option	Tungsten Size 1.0	1.6	2.4	3.2	4.0	4.8	6.4
4	6mm 1/4"	6 l/min	10mm	●	○	●	●	○	○	○	○	○
5	8mm 5/16"	6 l/min	10mm	●	○	●	●	○	○	○	○	○
6	10mm 3/8"	7 l/min	11mm	●	●	○	●	●	○	○	○	○
7	11mm 7/16"	7 l/min	12mm	●	○	○	○	●	●	○	○	○
8	12mm 1/2"	10 l/min	13mm	●	●	○	○	●	●	●	○	○
10	15mm 5/8"	12 l/min	15mm	●	●	○	○	○	○	●	●	○
12	19mm 3/4"	15 l/min	18mm	●	●	○	○	○	○	○	●	●

Note: Maximum recommended tungsten for Quartz option is 3.2mm.
Note: Quartz cups can be used for Aluminium welding but only in short runs
Note: Please refer to Page 68 for recommended Tungsten parameters.

Standard Nozzle Gas Lens Collet Body Set-Up

Recommended Set-up Parameters for Stainless Steel, Steel and Aluminium

Nozzle Size	Bore Size	Suggested Gas Flow Rate	Maximum Tungsten Stick-out	Ceramic Nozzle	Quartz Option	Tungsten Size 1.0	1.6	2.4	3.2	4.0	4.8	6.4
4	6mm 1/4"	5 l/min	10mm	●	○	●	●	○	○	○	○	○
5	8mm 5/16"	6 l/min	10mm	●	○	●	●	○	○	○	○	○
6	10mm 3/8"	7 l/min	13mm	●	●	○	●	●	○	○	○	○
7	11mm 7/16"	7 l/min	14mm	●	○	○	○	●	●	○	○	○
8	12mm 1/2"	8 l/min	15mm	●	●	○	○	●	●	●	○	○
10	15mm 5/8"	10 l/min	20mm	●	●	○	○	○	○	●	●	○
12	19mm 3/4"	13 l/min	20mm	●	●	○	○	○	○	○	●	●

Note: Maximum recommended tungsten for Quartz option is 3.2mm.
Quartz cups can be used for Aluminium welding but only in short runs
Please refer to Page 68 for recommended Tungsten parameters.

WEAR PARTS SET-UP OVERVIEW

T3/T5W/T5WA

Large Gas Lens Nozzle Large Gas Lens Collet Body Set-Up

Recommended Set-up Parameters for Stainless Steel, Steel and Aluminium

Nozzle Size	Bore Size	Suggested Gas Flow Rate	Maximum Tungsten Stick-out	Ceramic Nozzle	Quartz Option	Tungsten Size 1.0	1.6	2.4	3.2	4.0	4.8	6.4
8	12mm 1/2"	8 l/min	15mm	●	○	○	○	●	●	●	○	○
10	15mm 5/8"	10 l/min	20mm	●	○	○	○	○	○	●	●	○
12	19mm 3/4"	13 l/min	20mm	●	○	○	○	○	○	○	●	●
14	24mm 15/16"	15 l/min	25mm	●	○	○	○	○	○	○	●	●

Note: Please refer to Page 68 for recommended Tungsten parameters.
The Tungsten stick out should be minimum 10mm for Aluminium welding

Super Series Nozzle Super Series Gas Lens Collet Body Set-Up

Recommended Set-up Parameters for Titanium,Stainless Steel, Steel, Aluminium

Nozzle Size	Bore Size	Suggested Gas Flow Rate	Maximum Tungsten Stick-out	Ceramic Nozzle	Quartz Option	Tungsten Size 1.0	1.6	2.4	3.2	4.0	4.8	6.4
14	23mm 15/16"	12 l/min	25mm	●	●	○	●	●	●	○	○	○
18	28mm 1-1/10"	15 l/min	35mm	●	●	○	●	●	●	●	●	●
24	38mm 1-1/2"	20 l/min	55mm	●	○	○	●	●	●	●	●	●

Note: Maximum recommended tungsten for Quartz option is 3.2mm.
The Tungsten stick out should be minimum 10mm for Aluminium welding
Quartz cups can be used for Aluminium welding but only in short runs
150A DC max amps with 1/16"-1.6mm tungsten.
200A DC max amps with 3/32"-2.4mm tungsten.
240A DC max amps with 1/8"-3.2mm tungsten.
Prevent arc starting from gauze.
Start arc at low amp.
Please refer to Page 68 for recommended Tungsten parameters.

WEAR PARTS

High Performance Series

arc TORCHOLOGY
INTELLIGENT TORCH SOLUTIONS

MAKE WORK LIFE EASIER

Lasts 5 Times Longer!

Ceramic Cups

Part No.	Description	Size	Bore A		T1 / T1FX Series	T2 / T2FX	T3 / T3FX	T1W / T1WFX	T3W / T3WFX	T4W / T4WFX	T5W / T5WFX	T5WA
T1CC04	Ceramic Cup	4	6mm	1/4"	●			●				
T1CC05	Ceramic Cup	5	8mm	5/16"	●			●				
T1CC06	Ceramic Cup	6	10mm	3/8"	●			●				
T1CC07	Ceramic Cup	7	11mm	7/16"	●			●				
T1CC08	Ceramic Cup	8	12.5mm	1/2"	●			●				
T1CC10	Ceramic Cup	10	16mm	5/8"	●			●				
T1CC05S	Short Ceramic Cup	5	8mm	5/16"	●			●				
T1CC07S	Short Ceramic Cup	7	11mm	7/16"	●			●				
T1CC10S	Short Ceramic Cup	10	15mm	5/8"	●			●				
T2CC04	Ceramic Cup	4	6mm	1/4"		●			●	●		
T2CC05	Ceramic Cup	5	8mm	5/16"		●			●	●		
T2CC06	Ceramic Cup	6	10mm	3/8"		●			●	●		
T2CC07	Ceramic Cup	7	11mm	7/16"		●			●	●		
T2CC08	Ceramic Cup	8	12.5mm	1/2"		●			●	●		
T2CC10	Ceramic Cup	10	16mm	5/8"		●			●	●		
T3CC04	Ceramic Cup	4	6mm	1/4"			●				●	●
T3CC05	Ceramic Cup	5	8mm	5/16"			●				●	●
T3CC06	Ceramic Cup	6	10mm	3/8"			●				●	●
T3CC07	Ceramic Cup	7	11mm	7/16"			●				●	●
T3CC08	Ceramic Cup	8	12.5mm	1/2"			●				●	●
T3CC10	Ceramic Cup	10	16mm	5/8"			●				●	●
T3CC12	Ceramic Cup	12	19mm	3/4"			●				●	●

High Performance Ceramic Cups

Part No.	Description	Size	Bore A		T1 / T1FX Series	T2 / T2FX	T3 / T3FX	T1W / T1WFX	T3W / T3WFX	T4W / T4WFX	T5W / T5WFX	T5WA
T2CC06HP	High Performance Ceramic Cup	6	10mm	3/8"		●			●	●		
T2CC07HP	High Performance Ceramic Cup	7	11mm	7/16"		●			●	●		
T2CC08HP	High Performance Ceramic Cup	8	12.5mm	1/2"		●			●	●		
T2CC10HP	High Performance Ceramic Cup	10	16mm	5/8"		●			●	●		
T3CC06HP	High Performance Ceramic Cup	6	10mm	3/8"			●				●	●
T3CC07HP	High Performance Ceramic Cup	7	11mm	7/16"			●				●	●
T3CC08HP	High Performance Ceramic Cup	8	12.5mm	1/2"			●				●	●
T3CC10HP	High Performance Ceramic Cup	10	16mm	5/8"			●				●	●

Quartz Cups

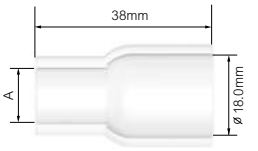

Part No.	Description	Size	Bore A		T1 / T1FX Series	T2 / T2FX	T3 / T3FX	T1W / T1WFX	T3W / T3WFX	T4W / T4WFX	T5W / T5WFX	T5WA
T1QZ06	Standard Quartz Cup	6	10mm	3/8"	●			●				
T1QZ08	Standard Quartz Cup	8	12mm	1/2"	●			●				
T1QZ10	Standard Quartz Cup	10	15mm	5/8"	●			●				

Quartz Cups

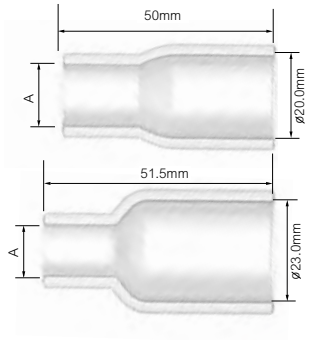

Part No.	Description	Size	Bore A		T1 / T1FX Series	T2 / T2FX	T3 / T3FX	T1W / T1WFX	T3W / T3WFX	T4W / T4WFX	T5W / T5WFX	T5WA
T2QZ06	Standard Quartz Cup	6	10mm	3/8"		●			●	●		
T2QZ08	Standard Quartz Cup	8	12mm	1/2"		●			●	●		
T2QZ10	Standard Quartz Cup	10	15mm	5/8"		●			●	●		
T3QZ06	Standard Quartz Cup	6	10mm	3/8"			●				●	●
T3QZ08	Standard Quartz Cup	8	12mm	1/2"			●				●	●
T3QZ10	Standard Quartz Cup	10	15mm	5/8"			●				●	●
T3QZ12	Standard Quartz Cup	12	20mm	3/4"			●				●	●

Large Gas Lens Ceramic Cups

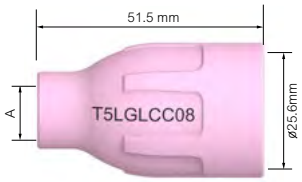

Part No.	Description	Size	Bore A		T1 / T1FX Series	T2 / T2FX	T3 / T3FX	T1W / T1WFX	T3W / T3WFX	T4W / T4WFX	T5W / T5WFX	T5WA
T5LGLCC08	Large Gas Lens Ceramic Cup	8	12.5mm	1/2"			●				●	●
T5LGLCC10	Large Gas Lens Ceramic Cup	10	16mm	5/8"			●				●	●
T5LGLCC12	Large Gas Lens Ceramic Cup	12	19mm	3/4"			●				●	●
T5LGLCC14	Large Gas Lens Ceramic Cup	14	24mm	15/16"							●	●

Collet Body

Lasts 10 Times Longer!

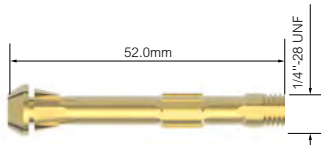

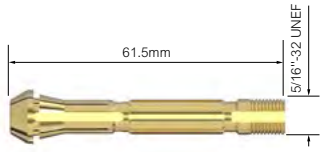

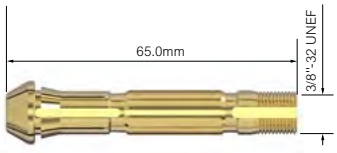

Part No.	Description	Bore		T1 / T1FX Series	T2 / T2FX	T3 / T3FX	T1W / T1WFX	T3W / T3WFX	T4W / T4WFX	T5W / T5WFX	T5WA
T1CB10	Collet Body	1.0mm	0.04"	●			●				
T1CB16	Collet Body	1.6mm	1/16"	●			●				
T1CB20	Collet Body	2.0mm	5/64"	●			●				
T1CB24	Collet Body	2.4mm	3/32"	●			●				
T1CB32	Collet Body	3.2mm	1/8"	●			●				
T1CB40	Collet Body	4.0mm	5/32"				●				
T2CB10	Collet Body	1.0mm	0.04"		●			●			
T2CB16	Collet Body	1.6mm	1/16"		●			●	●		
T2CB20	Collet Body	2.0mm	5/64"		●			●	●		
T2CB24	Collet Body	2.4mm	3/32"		●			●	●		
T2CB32	Collet Body	3.2mm	1/8"		●			●	●		
T2CB40	Collet Body	4.0mm	5/32"		●			●	●		
T2CB48	Collet Body	4.8mm	3/16"						●		
T3CB10	Collet Body	1.0mm	0.04"			●					
T3CB16	Collet Body	1.6mm	1/16"			●				●	●
T3CB20	Collet Body	2.0mm	5/64"			●				●	●
T3CB24	Collet Body	2.4mm	3/32"			●				●	●
T3CB32	Collet Body	3.2mm	1/8"			●				●	●
T3CB40	Collet Body	4.0mm	5/32"			●				●	●
T3CB48	Collet Body	4.8mm	3/16"			●				●	●
T3CB64	Collet Body	6.4mm	1/4"							●	●

● Standard wear part range

arc TORCHOLOGY INTELLIGENT TORCH SOLUTIONS | MAKE WORK LIFE EASIER

Gas Lens Collet Body

Lasts 20* Times Longer!

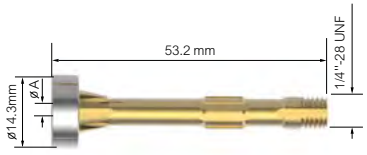

Part No.	Description	Bore		T1 / T1FX Series	T2 / T2FX	T3 / T3FX	T1W / T1WFX	T3W / T3WFX	T4W / T4WFX	T5W / T5WFX	T5WA
T1GL10	Gas Lens Collet Body	1.0mm	0.04"	●			●				
T1GL16	Gas Lens Collet Body	1.6mm	1/16"	●			●				
T1GL20	Gas Lens Collet Body	2.0mm	5/64"	●			●				
T1GL24	Gas Lens Collet Body	2.4mm	3/32"	●			●				
T1GL32	Gas Lens Collet Body	3.2mm	1/8"	●			●				
T1GL40	Gas Lens Collet Body	4.0mm	5/32"				●				

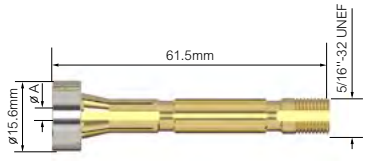

T2GL10	Gas Lens Collet Body	1.0mm	0.04"		●			●			
T2GL16	Gas Lens Collet Body	1.6mm	1/16"		●			●	●		
T2GL20	Gas Lens Collet Body	2.0mm	5/64"		●			●	●		
T2GL24	Gas Lens Collet Body	2.4mm	3/32"		●			●	●		
T2GL32	Gas Lens Collet Body	3.2mm	1/8"		●			●	●		
T2GL40	Gas Lens Collet Body	4.0mm	5/32"		●			●	●		
T2GL48	Gas Lens Collet Body	4.8mm	3/16"						●		

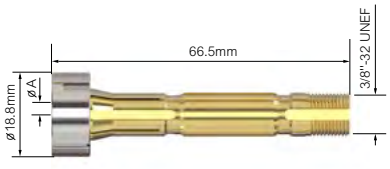

T3GL10	Gas Lens Collet Body	1.0mm	0.04"			●					
T3GL16	Gas Lens Collet Body	1.6mm	1/16"			●				●	●
T3GL20	Gas Lens Collet Body	2.0mm	5/64"			●				●	●
T3GL24	Gas Lens Collet Body	2.4mm	3/32"			●				●	●
T3GL32	Gas Lens Collet Body	3.2mm	1/8"			●				●	●
T3GL40	Gas Lens Collet Body	4.0mm	5/32"			●				●	●
T3GL48	Gas Lens Collet Body	4.8mm	3/16"			●				●	●
T3GL64	Gas Lens Collet Body	6.4mm	1/4"							●	●

Note: Replaceable gas lens filters are available for small and medium gas lens collet bodies - please refer to gas lens body filter kits

*Gas lens with replaceable gauze

Large Gas Lens Collet Body

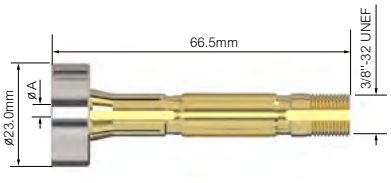

Part No.	Description	Bore		T1 / T1FX Series	T2 / T2FX	T3 / T3FX	T1W / T1WFX	T3W / T3WFX	T4W / T4WFX	T5W / T5WFX	T5WA
T5LGL10	Large Gas Lens Collet Body	1.0mm	0.04"			●					
T5LGL16	Large Gas Lens Collet Body	1.6mm	1/16"			●				●	●
T5LGL20	Large Gas Lens Collet Body	2.0mm	5/64"			●				●	●
T5LGL24	Large Gas Lens Collet Body	2.4mm	3/32"			●				●	●
T5LGL32	Large Gas Lens Collet Body	3.2mm	1/8"			●				●	●
T5LGL40	Large Gas Lens Collet Body	4.0mm	5/32"			●				●	●
T5LGL48	Large Gas Lens Collet Body	4.8mm	3/16"			●				●	●
T5LGL64	Large Gas Lens Collet Body	6.4mm	1/4"							●	●

Note: Large gas lens collet bodies have fixed filters

● Standard wear part range

Gas Lens Body Filter Kit

Part No.	Description	Bore		T1 / T1FX Series	T2 / T2FX	T3 / T3FX	T1W / T1WFX	T3W / T3WFX	T4W / T4WFX	T5W / T5WFX	T5WA
T1GL10FS-3KIT	Small Gas Lens Body Filter Kit	1.0mm	0.04"	●			●				
T1GL16FS-3KIT	Small Gas Lens Body Filter Kit	1.6mm	1/16"	●			●				
T1GL20FS-3KIT	Small Gas Lens Body Filter Kit	2.0mm	5/64"	●			●				
T1GL24FS-3KIT	Small Gas Lens Body Filter Kit	2.4mm	3/32"	●			●				
T1GL32FS-3KIT	Small Gas Lens Body Filter Kit	3.2mm	1/8"	●			●				
T1GL40FS-3KIT	Small Gas Lens Body Filter Kit	4.0mm	5/32"				●				
SGL10FS-3KIT	Small Gas Lens Body Filter Kit	1.0mm	0.04"		●			●			
SGL16FS-3KIT	Small Gas Lens Body Filter Kit	1.6mm	1/16"		●			●	●		
SGL20FS-3KIT	Small Gas Lens Body Filter Kit	2.0mm	5/64"		●			●	●		
SGL24FS-3KIT	Small Gas Lens Body Filter Kit	2.4mm	3/32"		●			●	●		

● Standard wear part range

Gas Lens Body Filter Kit

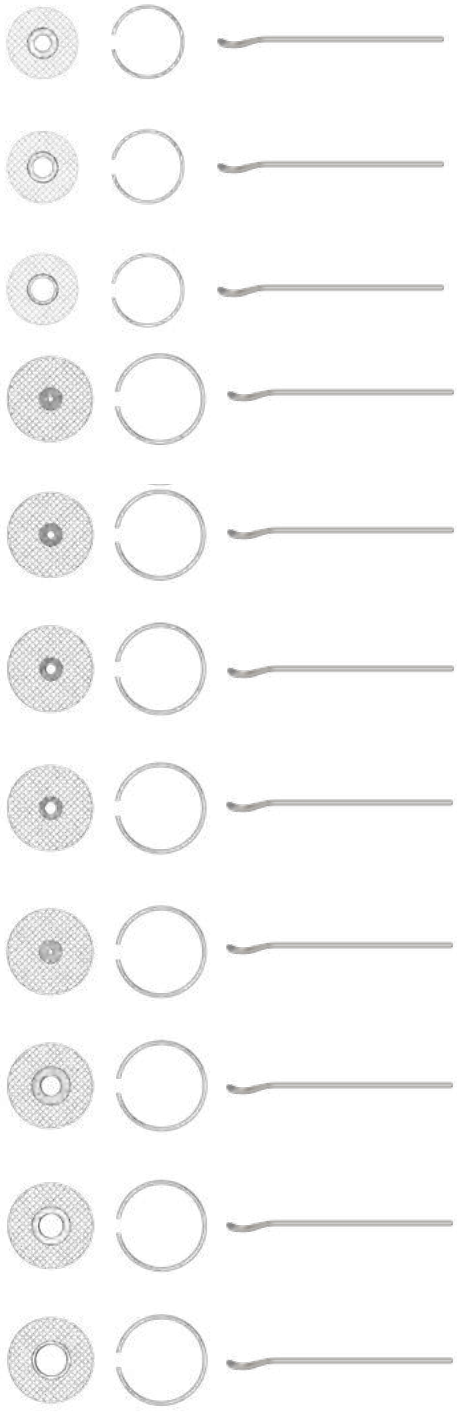

Part No.	Description	Bore		T1 / T1FX Series	T2 / T2FX	T3 / T3FX	T1W / T1WFX	T3W / T3WFX	T4W / T4WFX	T5W / T5WFX	T5WA
SGL32FL-3KIT	Small Gas Lens Body Filter Kit	3.2mm	1/8"		●			●	●		
SGL40FL-3KIT	Small Gas Lens Body Filter Kit	4.0mm	5/32"		●			●	●		
SGL48FL-3KIT	Small Gas Lens Body Filter Kit	4.8mm	3/16"						●		
MGL10FS-3KIT	Medium Gas Lens Body Filter Kit	1.0mm	0.04"			●					
MGL16FS-3KIT	Medium Gas Lens Body Filter Kit	1.6mm	1/16"			●				●	●
MGL20FS-3KIT	Medium Gas Lens Body Filter Kit	2.0mm	5/64"			●				●	●
MGL24FS-3KIT	Medium Gas Lens Body Filter Kit	2.4mm	3/32"			●				●	●
MGL32FS-3KIT	Medium Gas Lens Body Filter Kit	3.2mm	1/8"			●				●	●
MGL40FL-3KIT	Medium Gas Lens Body Filter Kit	4.0mm	5/32"			●				●	●
MGL48FL-3KIT	Medium Gas Lens Body Filter Kit	4.8mm	3/16"			●				●	●
MGL64FL-3KIT	Medium Gas Lens Body Filter Kit	6.4mm	1/4"							●	●

● Standard wear part range

CERAMIC STARTER KITS

The Arc Collet Body Starter Kits include everything you need to get started with Ceramic Cups

Collet Body Starter Kits

New

Part No.	Description	T1 / T1FX Series	T2 / T2FX	T3 / T3FX	T1W / T1WFX	T3W / T3WFX	T4W / T4WFX	T5W / T5WFX	T5WA
T1CB1	Small Collet Body Starter Kit 1.0mm-0.04"	●			●				
T1CB2	Small Collet Body Starter Kit 1.6mm-1/16"	●			●				
T1CB3	Small Collet Body Starter Kit 2.0mm-5/64"	●			●				
T1CB4	Small Collet Body Starter Kit 2.4mm-3/32"	●			●				
T1CB5	Small Collet Body Starter Kit 3.2mm-1/8"	●			●				
T1CB6	Small Collet Body Starter Kit 4.0mm-5/32"				●				

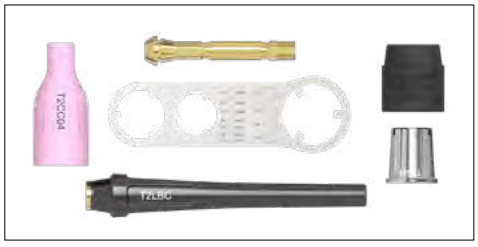

SCB1	Small Collet Body Starter Kit 1.0mm-0.04"		●			●			
SCB2	Small Collet Body Starter Kit 1.6mm-1/16"		●			●	●		
SCB3	Small Collet Body Starter Kit 2.0mm-5/64"		●			●	●		
SCB4	Small Collet Body Starter Kit 2.4mm-3/32"		●			●	●		
SCB5	Small Collet Body Starter Kit 3.2mm-1/8"		●			●	●		
SCB6	Small Collet Body Starter Kit 4.0mm-5/32"		●			●	●		
SCB7	Small Collet Body Starter Kit 4.8mm-3/16"						●		

MCB1	Medium Collet Body Starter Kit 1.0mm-0.04"			●					
MCB2	Medium Collet Body Starter Kit 1.6mm-1/16"			●				●	
MCB3	Medium Collet Body Starter Kit 2.0mm-5/64"			●				●	
MCB4	Medium Collet Body Starter Kit 2.4mm-3/32"			●				●	
MCB5	Medium Collet Body Starter Kit 3.2mm-1/8"			●				●	
MCB6	Medium Collet Body Starter Kit 4.0mm-5/32"			●				●	
MCB7	Medium Collet Body Starter Kit 4.8mm-3/16"			●				●	
MCB8	Medium Collet Body Starter Kit 6.4mm-1/4"							●	

New

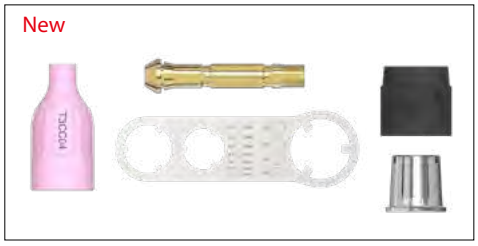

MCB1-AUTO	Auto Torch Medium Collet Body Starter Kit 1.0mm-0.04"								
MCB2-AUTO	Auto Torch Medium Collet Body Starter Kit 1.6mm-1/16"								●
MCB3-AUTO	Auto Torch Medium Collet Body Starter Kit 2.0mm-5/64"								●
MCB4-AUTO	Auto Torch Medium Collet Body Starter Kit 2.4mm-3/32"								●
MCB5-AUTO	Auto Torch Medium Collet Body Starter Kit 3.2mm-1/8"								●
MCB6-AUTO	Auto Torch Medium Collet Body Starter Kit 4.0mm-5/32"								●
MCB7-AUTO	Auto Torch Medium Collet Body Starter Kit 4.8mm-3/16"								●
MCB8-AUTO	Auto Torch Medium Collet Body Starter Kit 6.4mm-1/4"								●

The Arc Gas Lens Body Starter Kits include everything you need to get started with Ceramic Cups

Gas Lens Body Starter Kits

New

Part No.	Description	T1 / T1FX Series	T2 / T2FX	T3 / T3FX	T1W/T1WFX	T3W / T3WFX	T4W / T4WFX	T5W / T5WFX	T5WA
T1GL1	Small Gas Lens Body Starter Kit 1.0mm-0.04"	●			●				
T1GL2	Small Gas Lens Body Starter Kit 1.6mm-1/16"	●			●				
T1GL3	Small Gas Lens Body Starter Kit 2.0mm-5/64"	●			●				
T1GL4	Small Gas Lens Body Starter Kit 2.4mm-3/32"	●			●				
T1GL5	Small Gas Lens Body Starter Kit 3.2mm-1/8"	●			●				
T1GL6	Small Gas Lens Body Starter Kit 4.0mm-5/32"				●				

● Denotes applicable model

CERAMIC STARTER KITS

MAKE WORK LIFE EASIER

The Arc Gas Lens Body Starter Kits include everything you need to get started with Ceramic Cups

Gas Lens Body Starter Kits

New

New

Part No.	Description	T1 / T1FX Series	T2 / T2FX	T3 / T3FX	T1W / T1WFX	T3W / T3WFX	T4W / T4WFX	T5W / T5WFX	T5WA
SGL1	Small Gas Lens Body Starter Kit 1.0mm-0.04”		●			●			
SGL2	Small Gas Lens Body Starter Kit 1.6mm-1/16”		●			●	●		
SGL3	Small Gas Lens Body Starter Kit 2.0mm-5/64”		●			●	●		
SGL4	Small Gas Lens Body Starter Kit 2.4mm-3/32”		●			●	●		
SGL5	Small Gas Lens Body Starter Kit 3.2mm-1/8”		●			●	●		
SGL6	Small Gas Lens Body Starter Kit 4.0mm-5/32”		●			●	●		
SGL7	Small Gas Lens Body Starter Kit 4.8mm-3/16”						●		
MGL1	Medium Gas Lens Body Starter Kit 1.0mm-0.04”			●					
MGL2	Medium Gas Lens Body Starter Kit 1.6mm-1/16”			●				●	
MGL3	Medium Gas Lens Body Starter Kit 2.0mm-5/64”			●				●	
MGL4	Medium Gas Lens Body Starter Kit 2.4mm-3/32”			●				●	
MGL5	Medium Gas Lens Body Starter Kit 3.2mm-1/8”			●				●	
MGL6	Medium Gas Lens Body Starter Kit 4.0mm-5/32”			●				●	
MGL7	Medium Gas Lens Body Starter Kit 4.8mm-3/16”			●				●	
MGL8	Medium Gas Lens Body Starter Kit 6.4mm-1/4”							●	
MGL1-AUTO	Auto Torch Medium Gas Lens Body Starter Kit 1.0mm-0.04”								
MGL2-AUTO	Auto Torch Medium Gas Lens Body Starter Kit 1.6mm-1/16”								●
MGL3-AUTO	Auto Torch Medium Gas Lens Body Starter Kit 2.0mm-5/64”								●
MGL4-AUTO	Auto Torch Medium Gas Lens Body Starter Kit 2.4mm-3/32”								●
MGL5-AUTO	Auto Torch Medium Gas Lens Body Starter Kit 3.2mm-1/8”								●
MGL6-AUTO	Auto Torch Medium Gas Lens Body Starter Kit 4.0mm-5/32”								●
MGL7-AUTO	Auto Torch Medium Gas Lens Body Starter Kit 4.8mm-3/16”								●
MGL8-AUTO	Auto Torch Medium Gas Lens Body Starter Kit 6.4mm-1/4”								●
LGL1	Large Gas Lens Body Starter Kit 1.0mm-0.04”			●					
LGL2	Large Gas Lens Body Starter Kit 1.6mm-1/16”			●				●	
LGL3	Large Gas Lens Body Starter Kit 2.0mm-5/64”			●				●	
LGL4	Large Gas Lens Body Starter Kit 2.4mm-3/32”			●				●	
LGL5	Large Gas Lens Body Starter Kit 3.2mm-1/8”			●				●	
LGL6	Large Gas Lens Body Starter Kit 4.0mm-5/32”			●				●	
LGL7	Large Gas Lens Body Starter Kit 4.8mm-3/16”			●				●	
LGL8	Large Gas Lens Body Starter Kit 6.4mm-1/4”							●	
LGL1-AUTO	Auto Torch Large Gas Lens Body Starter Kit 1.0mm-0.04”								
LGL2-AUTO	Auto Torch Large Gas Lens Body Starter Kit 1.6mm-1/16”								●
LGL3-AUTO	Auto Torch Large Gas Lens Body Starter Kit 2.0mm-5/64”								●
LGL4-AUTO	Auto Torch Large Gas Lens Body Starter Kit 2.4mm-3/32”								●
LGL5-AUTO	Auto Torch Large Gas Lens Body Starter Kit 3.2mm-1/8”								●
LGL6-AUTO	Auto Torch Large Gas Lens Body Starter Kit 4.0mm-5/32”								●
LGL7-AUTO	Auto Torch Large Gas Lens Body Starter Kit 4.8mm-3/16”								●
LGL8-AUTO	Auto Torch Large Gas Lens Body Starter Kit 6.4mm-1/4”								●

● Denotes applicable model

QUARTZ STARTER KITS

The Arc Collet Body Starter Kits include everything you need to get started with Quartz Cups

Collet Body Starter Kits

New

Part No.	Description	T1 / T1FX Series	T2 / T2FX	T3 / T3FX	T1W / T1WFX	T3W / T3WFX	T4W / T4WFX	T5W / T5WFX	T5WA
QT1CB2	Small Collet Body Quartz Starter Kit 1.6mm-1/16”	●			●				
QT1CB4	Small Collet Body Quartz Starter Kit 2.4mm-3/32”	●			●				
QT1CB5	Small Collet Body Quartz Starter Kit 3.2mm-1/8”	●			●				

QSCB2	Small Collet Body Quartz Starter Kit 1.6mm-1/16”		●			●	●		
QSCB4	Small Collet Body Quartz Starter Kit 2.4mm-3/32”		●			●	●		
QSCB5	Small Collet Body Quartz Starter Kit 3.2mm-1/8”		●			●	●		

QMCB2	Medium Collet Body Quartz Starter Kit 1.6mm-1/16”			●				●	
QMCB4	Medium Collet Body Quartz Starter Kit 2.4mm-3/32”			●				●	
QMCB5	Medium Collet Body Quartz Starter Kit 3.2mm-1/8”			●				●	

New

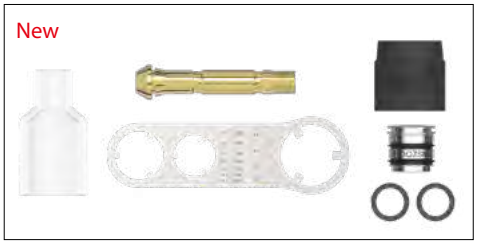

QMCB2-AUTO	Auto Torch Medium Collet Body Quartz Starter Kit 1.6mm-1/16”								●
QMCB4-AUTO	Auto Torch Medium Collet Body Quartz Starter Kit 2.4mm-3/32”								●
QMCB5-AUTO	Auto Torch Medium Collet Body Quartz Starter Kit 3.2mm-1/8”								●

● Denotes applicable model

QUARTZ STARTER KITS

The Arc Gas Lens Body Starter Kits include everything you need to get started with Quartz Cups

Gas Lens Body Starter Kits

Part No.	Description	T1 / T1FX Series	T2 / T2FX	T3 / T3FX	T1W / T1WFX	T3W / T3WFX	T4W / T4WFX	T5W / T5WFX	T5WA
QT1GL2	Small Gas Lens Body Quartz Starter Kit 1.6mm-1/16"	●			●				
QT1GL4	Small Gas Lens Body Quartz Starter Kit 2.4mm-3/32"	●			●				
QT1GL5	Small Gas Lens Body Quartz Starter Kit 3.2mm-1/8"	●			●				

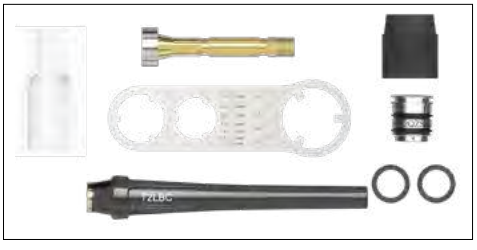

QSGL2	Small Gas Lens Body Quartz Starter Kit 1.6mm-1/16"		●			●	●		
QSGL4	Small Gas Lens Body Quartz Starter Kit 2.4mm-3/32"		●			●	●		
QSGL5	Small Gas Lens Body Quartz Starter Kit 3.2mm-1/8"		●			●	●		

QMGL2	Medium Gas Lens Body Quartz Starter Kit 1.6mm-1/16"			●				●	
QMGL4	Medium Gas Lens Body Quartz Starter Kit 2.4mm-3/32"			●				●	
QMGL5	Medium Gas Lens Body Quartz Starter Kit 3.2mm-1/8"			●				●	

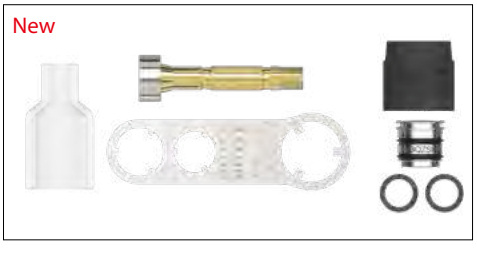

QMGL2-AUTO	Auto Torch Medium Gas Lens Body Quartz Starter Kit 1.6mm-1/16"								●
QMGL4-AUTO	Auto Torch Medium Gas Lens Body Quartz Starter Kit 2.4mm-3/32"								●
QMGL5-AUTO	Auto Torch Medium Gas Lens Body Quartz Starter Kit 3.2mm-1/8"								●

● Denotes applicable model

Accessory Kits

Part No.	Description	T1 / T1FX Series	T2 / T2FX	T3 / T3FX	T1W / T1WFX	T3W / T3WFX	T4W / T4WFX	T5W / T5WFX	T5WA
T1QAK1	Small Collet Body Accessory Kit	●	○	○	●	○	○	○	○

SMALL COLLET BODY ACCESSORY KIT
Collet Body 1.6mm - 1/16", 2.0mm - 5/64", 2.4mm - 3/32"
Ceramic Cup 8mm - 5/16", 10mm - 3/8", 11mm - 7/16"
Quartz Cup 10mm-3/8",12mm-1/2",15mm-5/8"
Special Seal Ring
Small Head Gasket
Small Heat Zone Isolator/ Quartz Heat Zone Isolator
Arc Spanner Small

T1QAK2	Small Collet Body Accessory Kit	●	○	○	●	○	○	○	○

SMALL COLLET BODY ACCESSORY KIT
Collet Body 2.4mm - 3/32"", 3.2mm -1/8"", 4.0mm - 5/32""
Ceramic Cup 11mm - 7/16"", 12.5mm - 1/2"", 15mm - 5/8""
Quartz Cup 10mm-3/8",12mm-1/2",15mm-5/8"
Special Seal Ring
Small Head Gasket
Small Heat Zone Isolator/ Quartz Heat Zone Isolator
Arc Spanner Small

T1QAK3	Small Gas Lens Body Accessory Kit	●	○	○	●	○	○	○	○

SMALL GAS LENS BODY ACCESSORY KIT
Gas Lens Collet Body 1.6mm - 1/16", 2.0mm - 5/64", 2.4mm - 3/32"
Ceramic Cup 10mm - 3/8", 11mm - 7/16", 12.5mm - 1/2"
Quartz Cup 10mm-3/8",12mm-1/2",15mm-5/8"
Special Seal Ring
Small Head Gasket
Small Heat Zone Isolator/ Quartz Heat Zone Isolator
Arc Spanner Small

T1QAK4	Small Gas Lens Body Accessory Kit	●	○	○	●	○	○	○	○

SMALL GAS LENS BODY ACCESSORY KIT
Gas Lens Collet Body 2.4mm - 3/32", 3.2mm -1/8", 4.0mm - 5/32"
Ceramic Cup 11mm - 7/16", 12.5mm - 1/2", 15mm - 5/8"
Quartz Cup 10mm-3/8",12mm-1/2",15mm-5/8"
Special Seal Ring
Small Head Gasket
Small Heat Zone Isolator/ Quartz Heat Zone Isolator
Arc Spanner Small

● Denotes applicable model

Accessory Kits

Part No.	Description	T1 / T1FX Series	T2 / T2FX	T3 / T3FX	T1W / T1WFX	T3W / T3WFX	T4W / T4WFX	T5W / T5WFX	T5WA
QAK1	Small Collet Body Accessory Kit	○	●	○	○	●	●	○	○

SMALL COLLET BODY ACCESSORY KIT
Collet Body 1.6mm - 1/16", 2.0mm - 5/64", 2.4mm - 3/32"
Ceramic Cup 8mm - 5/16", 10mm - 3/8", 11mm - 7/16"
Quartz Cup 10mm-3/8'',12mm-1/2",15mm-5/8"
Special Seal Ring
Small Head Gasket
Small Heat Zone Isolator/ Quartz Heat Zone Isolator
Arc Spanner

QAK2	Small Collet Body Accessory Kit	○	●	○	○	●	●	○	○

SMALL COLLET BODY ACCESSORY KIT
Collet Body 2.4mm - 3/32"", 3.2mm -1/8"", 4.0mm - 5/32""
Ceramic Cup 11mm - 7/16"", 12.5mm - 1/2"", 16mm - 5/8""
Quartz Cup 10mm-3/8'',12mm-1/2",15mm-5/8"
Special Seal Ring
Small Head Gasket
Small Heat Zone Isolator/ Quartz Heat Zone Isolator
Arc Spanner

QAK3	Small Gas Lens Body Accessory Kit	○	●	○	○	●	●	○	○

SMALL GAS LENS BODY ACCESSORY KIT
Gas Lens Collet Body 1.6mm - 1/16", 2.0mm - 5/64", 2.4mm - 3/32"
Ceramic Cup 10mm - 3/8", 11mm - 7/16", 12.5mm - 1/2"
Quartz Cup 10mm-3/8'',12mm-1/2",15mm-5/8"
Special Seal Ring
Small Head Gasket
Small Heat Zone Isolator/ Quartz Heat Zone Isolator
Arc Spanner

QAK4	Small Gas Lens Body Accessory Kit	○	●	○	○	●	●	○	○

SMALL GAS LENS BODY ACCESSORY KIT
Gas Lens Collet Body 2.4mm - 3/32", 3.2mm -1/8", 4.0mm - 5/32"
Ceramic Cup 11mm - 7/16", 12.5mm - 1/2", 16mm - 5/8"
Quartz Cup 10mm-3/8'',12mm-1/2",15mm-5/8"
Special Seal Ring
Small Head Gasket
Small Heat Zone Isolator/ Quartz Heat Zone Isolator
Arc Spanner

● Denotes applicable model

Accessory Kits

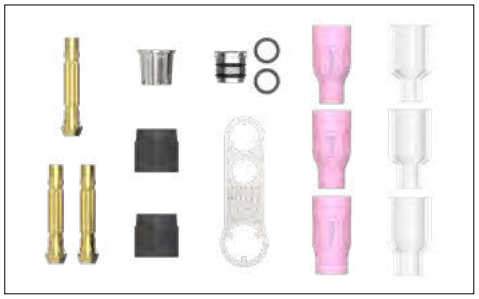

Part No.	Description	T1 / T1FX Series	T2 / T2FX	T3 / T3FX	T1W / T1WFX	T3W / T3WFX	T4W / T4WFX	T5W / T5WFX	T5WA
QAK5	Medium Collet Body Accessory Kit	○	○	●	○	○	○	●	●

MEDIUM COLLET BODY ACCESSORY KIT
Collet Body 2.4mm - 3/32", 3.2mm -1/8", 4.0mm - 5/32"
Ceramic Cup 11mm - 7/16", 12.5mm - 1/2", 16mm - 5/8"
Quartz Cup 10mm-3/8",12mm-1/2",15mm-5/8"
Special Seal Ring
Medium Head Gasket
Medium Heat Zone Isolator/ Quartz Heat Zone Isolator
Arc Spanner

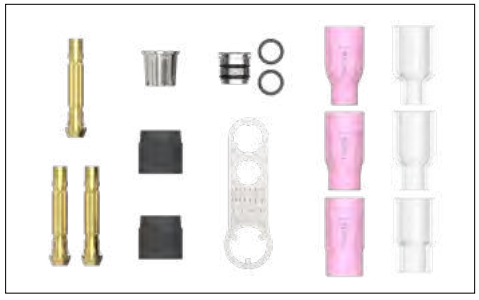

QAK6	Medium Collet Body Accessory Kit	○	○	●	○	○	○	●	●

MEDIUM COLLET BODY ACCESSORY KIT
Collet Body 4.0mm - 5/32", 4.8mm -3/16", 6.4mm - 1/4"
Ceramic Cup 12.5mm - 1/2", 16mm - 5/8", 19mm - 3/4"
Quartz Cup 12mm-1/2",15mm-5/8",20mm-3/4"
Special Seal Ring
Medium Head Gasket
Medium Heat Zone Isolator/ Quartz Heat Zone Isolator
Arc Spanner

QAK7	Medium Gas Lens Body Accessory Kit	○	○	●	○	○	○	●	●

MEDIUM GAS LENS BODY ACCESSORY KIT
Gas Lens Collet Body 2.4mm - 3/32", 3.2mm -1/8", 4.0mm - 5/32"
Ceramic Cup 11mm - 7/16", 12.5mm - 1/2", 16mm - 5/8"
Quartz Cup 10mm-3/8",12mm-1/2",15mm-5/8"
Special Seal Ring
Medium Head Gasket
Medium Heat Zone Isolator/ Quartz Heat Zone Isolator
Arc Spanner

QAK8	Medium Gas Lens Body Accessory Kit	○	○	●	○	○	○	●	●

MEDIUM GAS LENS BODY ACCESSORY KIT
Gas Lens Collet Body 4.0mm - 5/32", 4.8mm -3/16", 6.4mm - 1/4"
Ceramic Cup 12.5mm - 1/2", 16mm - 5/8", 19mm - 3/4"
Quartz Cup 12mm-1/2",15mm-5/8",20mm-3/4"
Special Seal Ring
Medium Head Gasket
Medium Heat Zone Isolator/ Quartz Heat Zone Isolator
Arc Spanner

● Denotes applicable model

SUPER SERIES SYSTEM SET-UP OVERVIEW

T1 / T1W Series New

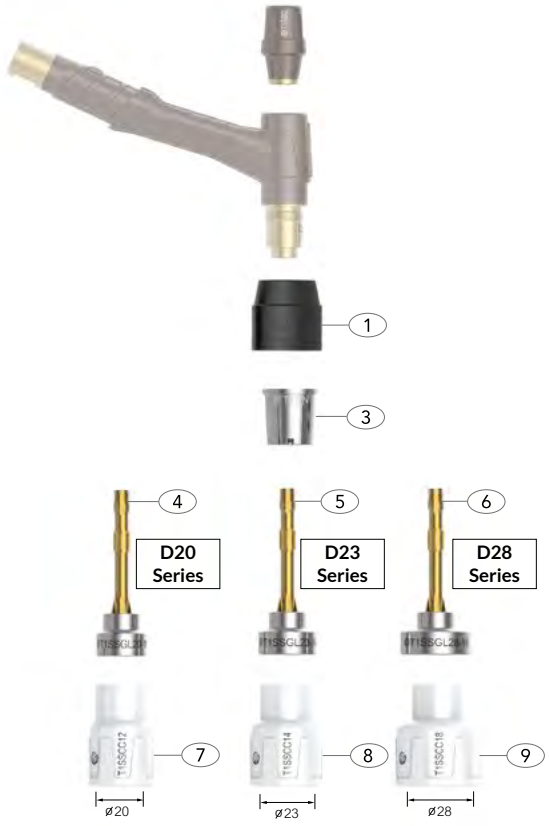

CERAMIC CUP

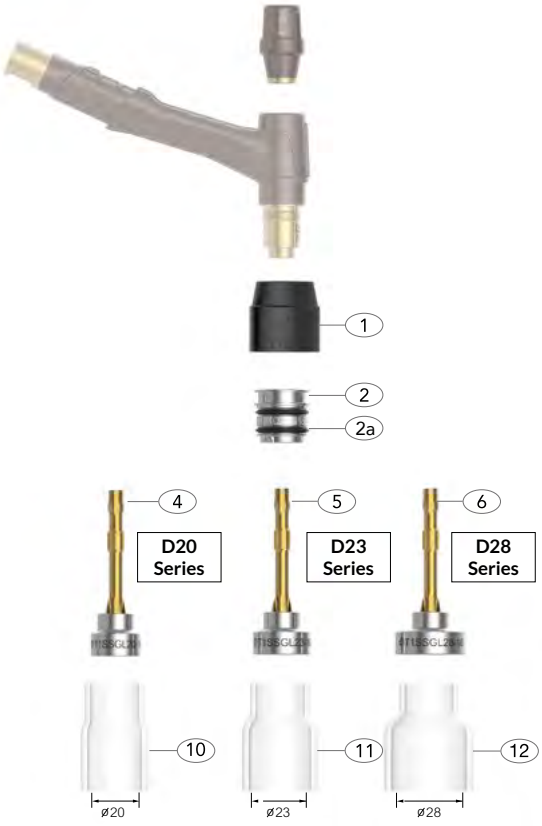

QUARTZ CUP

Wear Parts

	Part Number	Description
1	T1GS	Head Gasket
2	T1QZSN18	Quartz Heat Zone Isolator
2a	QZR-D18	Special Seal Rings
3	T1SN	Standard Heat Zone Isolator
4	T1SSGL20-16	Super Series Gas Lens Collet Body 1.6mm - 1/16"
	T1SSGL20-20	Super Series Gas Lens Collet Body 2.0mm - 5/64"
	T1SSGL20-24	Super Series Gas Lens Collet Body 2.4mm - 2/32"
	T1SSGL20-32	Super Series Gas Lens Collet Body 3.2mm - 1/8"
5	T1SSGL23-16	Super Series Gas Lens Collet Body 1.6mm - 1/16"
	T1SSGL23-20	Super Series Gas Lens Collet Body 2.0mm - 5/64"
	T1SSGL23-24	Super Series Gas Lens Collet Body 2.4mm - 2/32"
	T1SSGL23-32	Super Series Gas Lens Collet Body 3.2mm - 1/8"
6	T1SSGL28-16	Super Series Gas Lens Collet Body 1.6mm - 1/16"
	T1SSGL28-20	Super Series Gas Lens Collet Body 2.0mm - 5/64"
	T1SSGL28-24	Super Series Gas Lens Collet Body 2.4mm - 2/32"
	T1SSGL28-32	Super Series Gas Lens Collet Body 3.2mm - 1/8"

	Part Number	Description
7	T1SSCC12	Super Series Ceramic Cup 20mm - 3/4"
8	T1SSCC14	Super Series Ceramic Cup 23mm - 15/16"
9	T1SSCC18	Super Series Ceramic Cup 28mm - 1-1/10"
10	T1SSQZ12	Super Series Quartz Cup 20mm - 3/4"
11	T1SSQZ14	Super Series Quartz Cup 23mm - 15/16"
12	T1SSQZ18	Super Series Quartz Cup 28mm - 1-1/10"

SUPER SERIES SYSTEM SET-UP OVERVIEW

T2 / T2FX / T3W / T3WFX / T4W / T4WFX

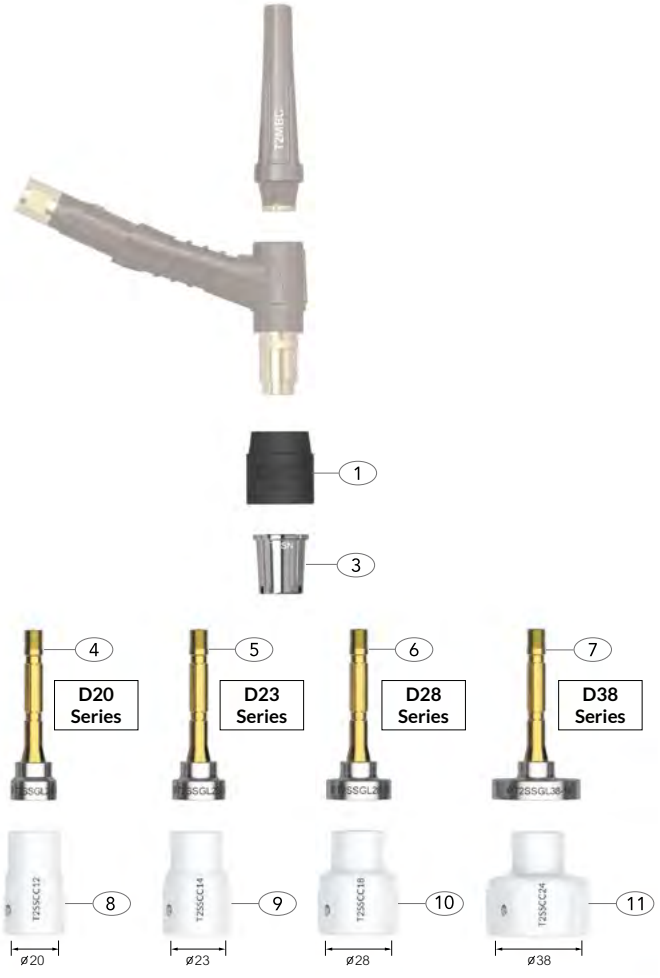

CERAMIC CUP

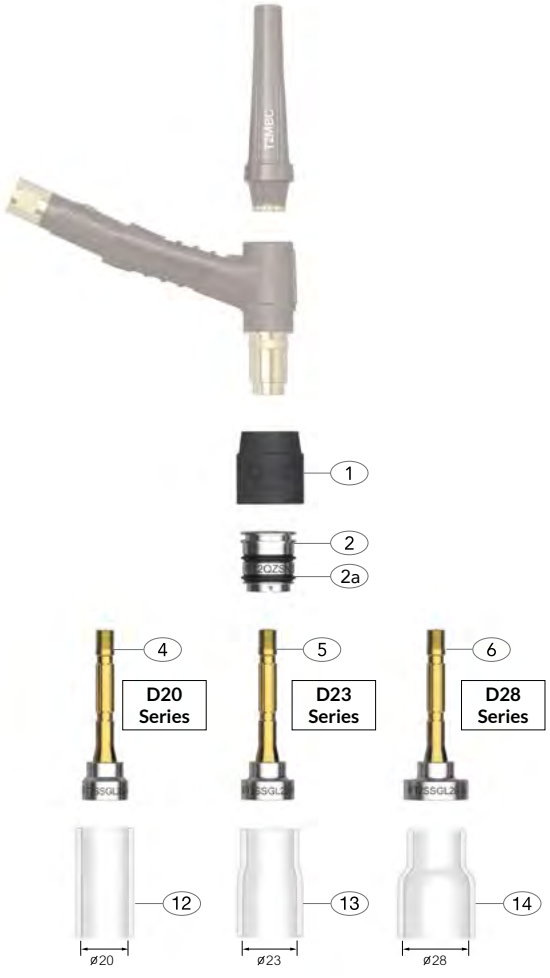

QUARTZ CUP

Wear Parts

	Part Number	Description
1	T2GS	Head Gasket
2	T2QZSN20	Quartz Heat Zone Isolator
2a	QZR-D20	Special Seal Rings
3	T2SN	Standard Heat Zone Isolator
4	T2SSGL20-16	Super Series Gas Lens Collet Body 1.6mm - 1/16"
	T2SSGL20-20	Super Series Gas Lens Collet Body 2.0mm - 5/64"
	T2SSGL20-24	Super Series Gas Lens Collet Body 2.4mm - 2/32"
	T2SSGL20-32	Super Series Gas Lens Collet Body 3.2mm - 1/8"
5	T2SSGL23-16	Super Series Gas Lens Collet Body 1.6mm - 1/16"
	T2SSGL23-20	Super Series Gas Lens Collet Body 2.0mm - 5/64"
	T2SSGL23-24	Super Series Gas Lens Collet Body 2.4mm - 2/32"
	T2SSGL23-32	Super Series Gas Lens Collet Body 3.2mm - 1/8"
6	T2SSGL28-16	Super Series Gas Lens Collet Body 1.6mm - 1/16"
	T2SSGL28-20	Super Series Gas Lens Collet Body 2.0mm - 5/64"
	T2SSGL28-24	Super Series Gas Lens Collet Body 2.4mm - 2/32"
	T2SSGL28-32	Super Series Gas Lens Collet Body 3.2mm - 1/8"
	T2SSGL28-40	Super Series Gas Lens Collet Body 4.0mm - 5/32"
	T2SSGL28-48	Super Series Gas Lens Collet Body 4.8mm - 3/16"

	Part Number	Description
7	T2SSGL38-16	Super Series Gas Lens Collet Body 1.6mm - 1/16"
	T2SSGL38-20	Super Series Gas Lens Collet Body 2.0mm - 5/64"
	T2SSGL38-24	Super Series Gas Lens Collet Body 2.4mm - 2/32"
	T2SSGL38-32	Super Series Gas Lens Collet Body 3.2mm - 1/8"
	T2SSGL38-40	Super Series Gas Lens Collet Body 4.0mm - 5/32"
	T2SSGL38-48	Super Series Gas Lens Collet Body 4.8mm - 3/16"
8	T2SSCC12	Super Series Ceramic Cup 20mm - 3/4"
9	T2SSCC14	Super Series Ceramic Cup 23mm - 15/16"
10	T2SSCC18	Super Series Ceramic Cup 28mm - 1-1/10"
11	T2SSCC24	Super Series Ceramic Cup 38mm - 1-9/16"
12	T2SSQZ12	Super Series Quartz Cup 20mm - 3/4"
13	T2SSQZ14	Super Series Quartz Cup 23mm - 15/16"
14	T2SSQZ18	Super Series Quartz Cup 28mm - 1-1/10"

SUPER SERIES SYSTEM SET-UP OVERVIEW

MAKE WORK LIFE EASIER

T3 / T3FX / T5W / T5WFX / T5WA

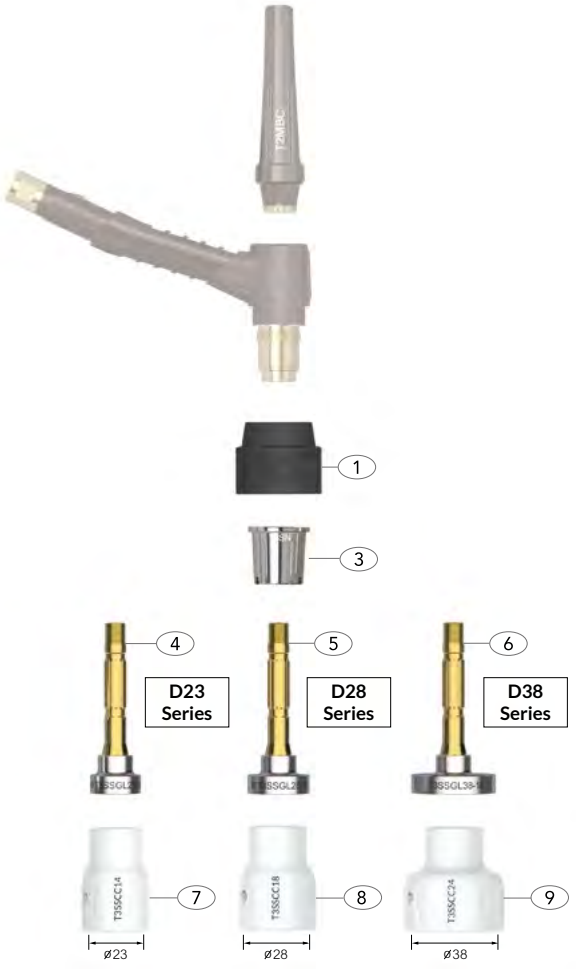

CERAMIC CUP

QUARTZ CUP

Wear Parts

	Part Number	Description
1	T3GS	Head Gasket
2	T3QZSN23	Quartz Heat Zone Isolator
2a	QZR-D23	Special Seal Rings
3	T3SN	Standard Heat Zone Isolator
4	T3SSGL23-16	Super Series Gas Lens Collet Body 1.6mm - 1/16"
	T3SSGL23-20	Super Series Gas Lens Collet Body 2.0mm - 5/64"
	T3SSGL23-24	Super Series Gas Lens Collet Body 2.4mm - 2/32"
	T3SSGL23-32	Super Series Gas Lens Collet Body 3.2mm - 1/8"
5	T3SSGL28-16	Super Series Gas Lens Collet Body 1.6mm - 1/16"
	T3SSGL28-20	Super Series Gas Lens Collet Body 2.0mm - 5/64"
	T3SSGL28-24	Super Series Gas Lens Collet Body 2.4mm - 2/32"
	T3SSGL28-32	Super Series Gas Lens Collet Body 3.2mm - 1/8"
	T3SSGL28-40	Super Series Gas Lens Collet Body 4.0mm - 5/32"
	T3SSGL28-48	Super Series Gas Lens Collet Body 4.8mm - 3/16"
	T3SSGL28-64	Super Series Gas Lens Collet Body 6.4mm - 1/4"

	Part Number	Description
6	T3SSGL38-16	Super Series Gas Lens Collet Body 1.6mm - 1/16"
	T3SSGL38-20	Super Series Gas Lens Collet Body 2.0mm - 5/64"
	T3SSGL38-24	Super Series Gas Lens Collet Body 2.4mm - 2/32"
	T3SSGL38-32	Super Series Gas Lens Collet Body 3.2mm - 1/8"
	T3SSGL38-40	Super Series Gas Lens Collet Body 4.0mm - 5/32"
	T3SSGL38-48	Super Series Gas Lens Collet Body 4.8mm - 3/16"
	T3SSGL38-64	Super Series Gas Lens Collet Body 6.4mm - 1/4"
7	T3SSCC14	Super Series Ceramic Cup 23mm - 15/16"
8	T2SSCC18	Super Series Ceramic Cup 28mm - 1-1/10"
9	T2SSCC24	Super Series Ceramic Cup 38mm - 1-9/16"
10	T3SSQZ14	Super Series Quartz Cup 23mm - 15/16"
11	T3SSQZ18	Super Series Quartz Cup 28mm - 1-1/10"

SUPER SERIES SYSTEM SET-UP OVERVIEW

T5WA Auto

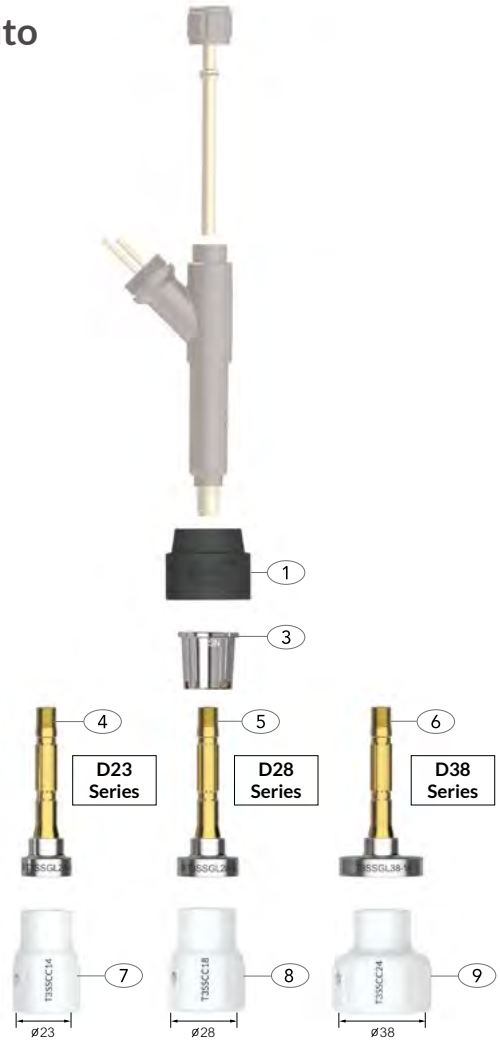

CERAMIC CUP

QUARTZ CUP

Wear Parts

	Part Number	Description
1	T3GS	Head Gasket
2	T3QZSN23	Quartz Heat Zone Isolator
2a	QZR-D23	Special Seal Rings
3	T3SN	Standard Heat Zone Isolator
4	T3SSGL23-16	Super Series Gas Lens Collet Body 1.6mm - 1/16"
	T3SSGL23-20	Super Series Gas Lens Collet Body 2.0mm - 5/64"
	T3SSGL23-24	Super Series Gas Lens Collet Body 2.4mm - 2/32"
	T3SSGL23-32	Super Series Gas Lens Collet Body 3.2mm - 1/8"
5	T3SSGL28-16	Super Series Gas Lens Collet Body 1.6mm - 1/16"
	T3SSGL28-20	Super Series Gas Lens Collet Body 2.0mm - 5/64"
	T3SSGL28-24	Super Series Gas Lens Collet Body 2.4mm - 2/32"
	T3SSGL28-32	Super Series Gas Lens Collet Body 3.2mm - 1/8"
	T3SSGL28-40	Super Series Gas Lens Collet Body 4.0mm - 5/32"
	T3SSGL28-48	Super Series Gas Lens Collet Body 4.8mm - 3/16"
	T3SSGL28-64	Super Series Gas Lens Collet Body 6.4mm - 1/4"

	Part Number	Description
6	T3SSGL38-16	Super Series Gas Lens Collet Body 1.6mm - 1/16"
	T3SSGL38-20	Super Series Gas Lens Collet Body 2.0mm - 5/64"
	T3SSGL38-24	Super Series Gas Lens Collet Body 2.4mm - 2/32"
	T3SSGL38-32	Super Series Gas Lens Collet Body 3.2mm - 1/8"
	T3SSGL38-40	Super Series Gas Lens Collet Body 4.0mm - 5/32"
	T3SSGL38-48	Super Series Gas Lens Collet Body 4.8mm - 3/16"
	T3SSGL38-64	Super Series Gas Lens Collet Body 6.4mm - 1/4"
7	T3SSCC14	Super Series Ceramic Cup 23mm - 15/16"
8	T2SSCC18	Super Series Ceramic Cup 28mm - 1-1/10"
9	T2SSCC24	Super Series Ceramic Cup 38mm - 1-9/16"
10	T3SSQZ14	Super Series Quartz Cup 23mm - 15/16"
11	T3SSQZ18	Super Series Quartz Cup 28mm - 1-1/10"

ARCTORCHOLOGY.COM

SUPER SERIES SYSTEM WEAR PARTS

arc TORCHOLOGY
INTELLIGENT TORCH SOLUTIONS

MAKE WORK LIFE EASIER

Super Series Ceramic Cups

Lasts 5 Times Longer!

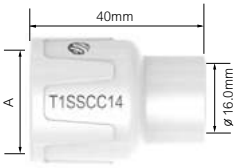

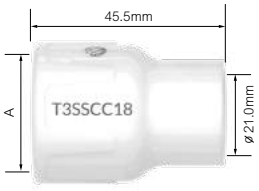

Part No.	Description	Bore A		T1 / T1FX Series	T2 / T2FX	T3 / T3FX	T1W / T1WFX	T3W / T3WFX	T4W / T4WFX	T5W / T5WFX	T5WA
T1SSCC12	Super Series Ceramic Cup	20mm	3/4"	●			●				
T1SSCC14	Super Series Ceramic Cup	23mm	15/16"	●			●				
T1SSCC18	Super Series Ceramic Cup	28mm	1-1/10"	●			●				
T2SSCC12	Super Series Ceramic Cup	20mm	3/4"		●			●	●		
T2SSCC14	Super Series Ceramic Cup	23mm	15/16"		●			●	●		
T2SSCC18	Super Series Ceramic Cup	28mm	1-1/10"		●			●	●		
T2SSCC24	Super Series Ceramic Cup	38mm	1-9/16"		●			●	●		
T3SSCC14	Super Series Ceramic Cup	23mm	15/16"			●				●	●
T3SSCC18	Super Series Ceramic Cup	28mm	1-1/10"			●				●	●
T3SSCC24	Super Series Ceramic Cup	38mm	1-9/16"			●				●	●

Super Series Quartz Cups

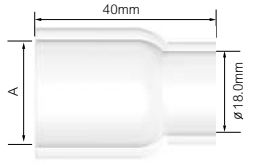

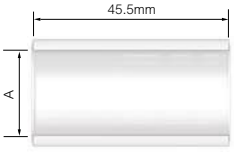

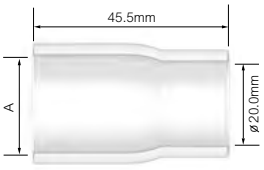

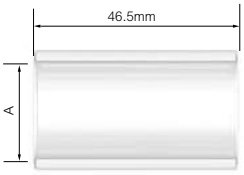

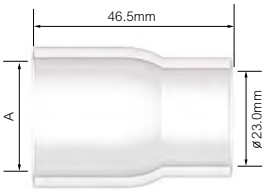

Part No.	Description	Bore A		T1 / T1FX Series	T2 / T2FX	T3 / T3FX	T1W / T1WFX	T3W / T3WFX	T4W / T4WFX	T5W / T5WFX	T5WA
T1SSQZ12	Super Series Quartz Cup	20mm	3/4"	●			●				
T1SSQZ14	Super Series Quartz Cup	23mm	15/16"	●			●				
T1SSQZ18	Super Series Quartz Cup	28mm	1-1/10"	●			●				
T2SSQZ12	Super Series Quartz Cup	20mm	3/4"		●			●	●		
T2SSQZ14	Super Series Quartz Cup	23mm	15/16"		●			●	●		
T2SSQZ18	Super Series Quartz Cup	28mm	1-1/10"		●			●	●		
T3SSQZ14	Super Series Quartz Cup	23mm	15/16"			●				●	●
T3SSQZ18	Super Series Quartz Cup	28mm	1-1/10"			●				●	●

● Standard wear part range

The design, manufacturing and quality systems of Arc Torchology are certified by **BVQI** in accordance with EN/ISO 9001:2015

SUPER SERIES SYSTEM WEAR PARTS

arc TORCHOLOGY INTELLIGENT TORCH SOLUTIONS | MAKE WORK LIFE EASIER

Lasts 20* Times Longer!

Super Series Gas Lens Collet Bodies

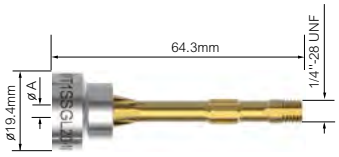

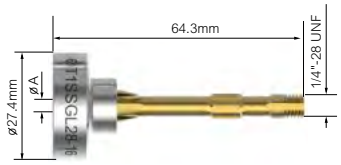

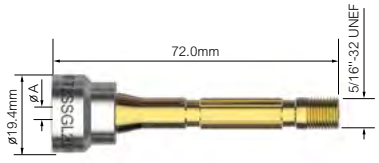

Part No.	Description	Bore A		T1 / T1FX Series	T2 / T2FX	T3 / T3FX	T1W / T1WFX	T3W / T3WFX	T4W / T4WFX	T5W / T5WFX	T5WA
T1SSGL20-16	Super Series Gas Lens Collet Body - D20	1.6mm	1/16"	●			●				
T1SSGL20-20	Super Series Gas Lens Collet Body - D20	2.0mm	5/64"	●			●				
T1SSGL20-24	Super Series Gas Lens Collet Body - D20	2.4mm	3/32"	●			●				
T1SSGL20-32	Super Series Gas Lens Collet Body - D20	3.2mm	1/8"	●			●				
T1SSGL23-16	Super Series Gas Lens Collet Body - D23	1.6mm	1/16"	●			●				
T1SSGL23-20	Super Series Gas Lens Collet Body - D23	2.0mm	5/64"	●			●				
T1SSGL23-24	Super Series Gas Lens Collet Body - D23	2.4mm	3/32"	●			●				
T1SSGL23-32	Super Series Gas Lens Collet Body - D23	3.2mm	1/8"	●			●				
T1SSGL28-16	Super Series Gas Lens Collet Body - D28	1.6mm	1/16"	●			●				
T1SSGL28-20	Super Series Gas Lens Collet Body - D28	2.0mm	5/64"	●			●				
T1SSGL28-24	Super Series Gas Lens Collet Body - D28	2.4mm	3/32"	●			●				
T1SSGL28-32	Super Series Gas Lens Collet Body - D28	3.2mm	1/8"	●			●				
T2SSGL20-16	Super Series Gas Lens Collet Body - D20	1.6mm	1/16"		●			●	●		
T2SSGL20-20	Super Series Gas Lens Collet Body - D20	2.0mm	5/64"		●			●	●		
T2SSGL20-24	Super Series Gas Lens Collet Body - D20	2.4mm	3/32"		●			●	●		
T2SSGL20-32	Super Series Gas Lens Collet Body - D20	3.2mm	1/8"		●			●	●		
T2SSGL23-16	Super Series Gas Lens Collet Body - D23	1.6mm	1/16"		●			●	●		
T2SSGL23-20	Super Series Gas Lens Collet Body - D23	2.0mm	5/64"		●			●	●		
T2SSGL23-24	Super Series Gas Lens Collet Body - D23	2.4mm	3/32"		●			●	●		
T2SSGL23-32	Super Series Gas Lens Collet Body - D23	3.2mm	1/8"		●			●	●		
T2SSGL28-16	Super Series Gas Lens Collet Body - D28	1.6mm	1/16"		●			●	●		
T2SSGL28-20	Super Series Gas Lens Collet Body - D28	2.0mm	5/64"		●			●	●		
T2SSGL28-24	Super Series Gas Lens Collet Body - D28	2.4mm	3/32"		●			●	●		
T2SSGL28-32	Super Series Gas Lens Collet Body - D28	3.2mm	1/8"		●			●	●		
T2SSGL28-40	Super Series Gas Lens Collet Body - D28	4.0mm	5/32"		●			●	●		
T2SSGL28-48	Super Series Gas Lens Collet Body - D28	4.8mm	3/16"		●			●	●		

● Standard wear part range

SUPER SERIES SYSTEM WEAR PARTS

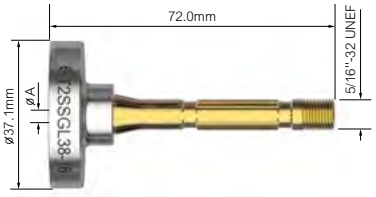

Part No.	Description	Bore A		T1 / T1FX Series	T2 / T2FX	T3 / T3FX	T1W / T1WFX	T3W / T3WFX	T4W / T4WFX	T5W / T5WFX	T5WA
T2SSGL38-16	Super Series Gas Lens Collet Body - D38	1.6mm	1/16"	○	●	○	○	●	●	○	○
T2SSGL38-20	Super Series Gas Lens Collet Body - D38	2.0mm	5/64"	○	●	○	○	●	●	○	○
T2SSGL38-24	Super Series Gas Lens Collet Body - D38	2.4mm	3/32"	○	●	○	○	●	●	○	○
T2SSGL38-32	Super Series Gas Lens Collet Body - D38	3.2mm	1/8"	○	●	○	○	●	●	○	○
T2SSGL38-40	Super Series Gas Lens Collet Body - D38	4.0mm	5/32"	○	●	○	○	●	●	○	○
T2SSGL38-48	Super Series Gas Lens Collet Body - D38	4.8mm	3/16"	○	●	○	○	●	●	○	○

T3SSGL23-16	Super Series Gas Lens Collet Body - D23	1.6mm	1/16"	○	○	●	○	○	○	●	●
T3SSGL23-20	Super Series Gas Lens Collet Body - D23	2.0mm	5/64"	○	○	●	○	○	○	●	●
T3SSGL23-24	Super Series Gas Lens Collet Body - D23	2.4mm	3/32"	○	○	●	○	○	○	●	●
T3SSGL23-32	Super Series Gas Lens Collet Body - D23	3.2mm	1/8"	○	○	●	○	○	○	●	●

T3SSGL28-16	Super Series Gas Lens Collet Body - D28	1.6mm	1/16"	○	○	●	○	○	○	●	●
T3SSGL28-20	Super Series Gas Lens Collet Body - D28	2.0mm	5/64"	○	○	●	○	○	○	●	●
T3SSGL28-24	Super Series Gas Lens Collet Body - D28	2.4mm	3/32"	○	○	●	○	○	○	●	●
T3SSGL28-32	Super Series Gas Lens Collet Body - D28	3.2mm	1/8"	○	○	●	○	○	○	●	●
T3SSGL28-40	Super Series Gas Lens Collet Body - D28	4.0mm	5/32"	○	○	●	○	○	○	●	●
T3SSGL28-48	Super Series Gas Lens Collet Body - D28	4.8mm	3/16"	○	○	●	○	○	○	●	●
T3SSGL28-64	Super Series Gas Lens Collet Body - D28	6.4mm	1/4"	○	○	●	○	○	○	●	●

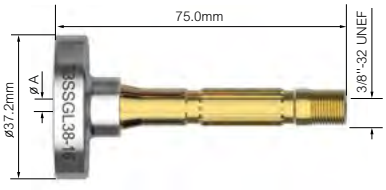

T3SSGL38-16	Super Series Gas Lens Collet Body - D38	1.6mm	1/16"	○	○	●	○	○	○	●	●
T3SSGL38-20	Super Series Gas Lens Collet Body - D38	2.0mm	5/64"	○	○	●	○	○	○	●	●
T3SSGL38-24	Super Series Gas Lens Collet Body - D38	2.4mm	3/32"	○	○	●	○	○	○	●	●
T3SSGL38-32	Super Series Gas Lens Collet Body - D38	3.2mm	1/8"	○	○	●	○	○	○	●	●
T3SSGL38-40	Super Series Gas Lens Collet Body - D38	4.0mm	5/32"	○	○	●	○	○	○	●	●
T3SSGL38-48	Super Series Gas Lens Collet Body - D38	4.8mm	3/16"	○	○	●	○	○	○	●	●
T3SSGL38-64	Super Series Gas Lens Collet Body - D38	6.4mm	1/4"	○	○	●	○	○	○	●	●

● Standard wear part range

Super Series Gas Lens Body Filter Kit

Part No.	Description		Bore	T1 / T1FX Series	T2 / T2FX	T3 / T3FX	T1W / T1WFX	T3W / T3WFX	T4W / T4WFX	T5W / T5WFX	T5WA
SSGL13-16FS-3KIT	Super Series Gas Lens Body Filter Kit	1.6mm	1/16"	●	○	○	●	○	○	○	○
SSGL13-20FS-3KIT	Super Series Gas Lens Body Filter Kit	2.0mm	5/64"	●	○	○	●	○	○	○	○
SSGL13-24FS-3KIT	Super Series Gas Lens Body Filter Kit	2.4mm	3/32"	●	○	○	●	○	○	○	○
SSGL13-32FS-3KIT	Super Series Gas Lens Body Filter Kit	3.2mm	1/8"	●	○	○	●	○	○	○	○

SSGL14.5-16FS-3KIT	Super Series Gas Lens Body Filter Kit	1.6mm	1/16"	○	●	●	○	●	●	●	●
SSGL14.5-20FS-3KIT	Super Series Gas Lens Body Filter Kit	2.0mm	5/64"	○	●	●	○	●	●	●	●
SSGL14.5-24FS-3KIT	Super Series Gas Lens Body Filter Kit	2.4mm	3/32"	○	●	●	○	●	●	●	●
SSGL14.5-32FS-3KIT	Super Series Gas Lens Body Filter Kit	3.2mm	1/8"	○	●	●	○	●	●	●	●

SSGL20-16FS-3KIT	Super Series Gas Lens Body Filter Kit	1.6mm	1/16"	●	●	○	●	●	●	○	○
SSGL20-20FS-3KIT	Super Series Gas Lens Body Filter Kit	2.0mm	5/64"	●	●	○	●	●	●	○	○
SSGL20-24FS-3KIT	Super Series Gas Lens Body Filter Kit	2.4mm	3/32"	●	●	○	●	●	●	○	○
SSGL20-32FS-3KIT	Super Series Gas Lens Body Filter Kit	3.2mm	1/8"	●	●	○	●	●	●	○	○

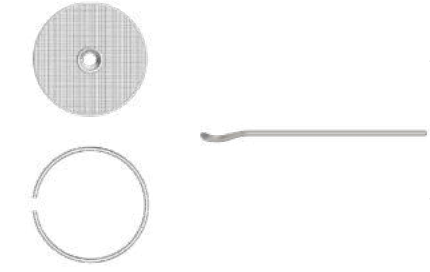

SSGL23-16FS-3KIT	Super Series Gas Lens Body Filter Kit	1.6mm	1/16"	●	●	●	●	●	●	●	●
SSGL23-20FS-3KIT	Super Series Gas Lens Body Filter Kit	2.0mm	5/64"	●	●	●	●	●	●	●	●
SSGL23-24FS-3KIT	Super Series Gas Lens Body Filter Kit	2.4mm	3/32"	●	●	●	●	●	●	●	●
SSGL23-32FS-3KIT	Super Series Gas Lens Body Filter Kit	3.2mm	1/8"	●	●	●	●	●	●	●	●

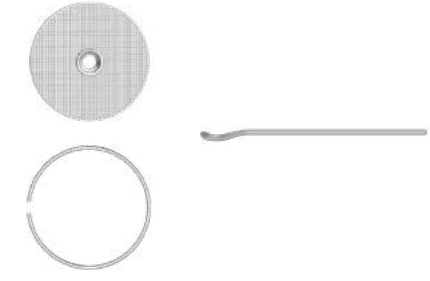

SSGL28-16FS-3KIT	Super Series Gas Lens Body Filter Kit	1.6mm	1/16"	●	●	●	●	●	●	●	●
SSGL28-20FS-3KIT	Super Series Gas Lens Body Filter Kit	2.0mm	5/64"	●	●	●	●	●	●	●	●
SSGL28-24FS-3KIT	Super Series Gas Lens Body Filter Kit	2.4mm	3/32"	●	●	●	●	●	●	●	●
SSGL28-32FS-3KIT	Super Series Gas Lens Body Filter Kit	3.2mm	1/8"	●	●	●	●	●	●	●	●
SSGL28-40FS-3KIT	Super Series Gas Lens Body Filter Kit	4.0mm	5/32"	●	●	●	●	●	●	●	●
SSGL28-48FS-3KIT	Super Series Gas Lens Body Filter Kit	4.8mm	3/16"	●	●	●	●	●	●	●	●
SSGL28-64FS-3KIT	Super Series Gas Lens Body Filter Kit	6.4mm	1/4"	●	●	●	●	●	●	●	●

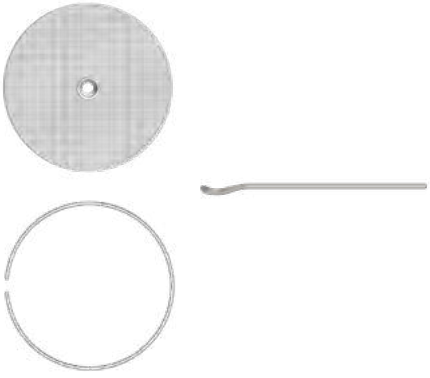

SSGL38-16FS-3KIT	Super Series Gas Lens Body Filter Kit	1.6mm	1/16"	○	●	●	○	●	●	●	●
SSGL38-20FS-3KIT	Super Series Gas Lens Body Filter Kit	2.0mm	5/64"	○	●	●	○	●	●	●	●
SSGL38-24FS-3KIT	Super Series Gas Lens Body Filter Kit	2.4mm	3/32"	○	●	●	○	●	●	●	●
SSGL38-32FS-3KIT	Super Series Gas Lens Body Filter Kit	3.2mm	1/8"	○	●	●	○	●	●	●	●
SSGL38-40FS-3KIT	Super Series Gas Lens Body Filter Kit	4.0mm	5/32"	○	●	●	○	●	●	●	●
SSGL38-48FS-3KIT	Super Series Gas Lens Body Filter Kit	4.8mm	3/16"	○	●	●	○	●	●	●	●
SSGL38-64FS-3KIT	Super Series Gas Lens Body Filter Kit	6.4mm	1/4"	○	●	●	○	●	●	●	●

Super Series Accessory Kits

Part No.	Description	T1 / T1FX Series	T2 / T2FX	T3 / T3FX	T1W / T1WFX	T3W / T3WFX	T4W / T4WFX	T5W / T5WFX	T5WA
T1SSAK_16	Super Series 1.6mm Accessory Kit	●	○	○	●	○	○	○	○

SUPER SERIES 1.6MM ACCESSORY KIT

Super Series Gas Lens Collet Body 1.6mm - 1/16" (D20, D23, D28)
Super Series Ceramic Cup 20mm - 3/4", 23mm - 15/16", 28mm - 1-1/10"
Super Series Quartz Cup 20mm - 3/4", 23mm - 15/16", 28mm - 1-1/10"
Head Gasket / Standard Heat Isolator / Quartz Heat Zone Isolator / Special Seal Ring
Spring Ring(D20, D23, D28)
Super Series Gas Lens Filter Kit 1.6mm - 1/16" (D20, D23, D28)
Long Back Cap, Medium Back Cap, Short Back Cap
Gas Lens Body Spring Ring Tool

T1SSAK_24	Super Series 2.4mm Accessory Kit	●	○	○	●	○	○	○	○

SUPER SERIES 2.4MM ACCESSORY KIT

Super Series Gas Lens Collet Body 2.4mm - 2/32" (D20, D23, D28)
Super Series Ceramic Cup 20mm - 3/4", 23mm - 15/16", 28mm - 1-1/10"
Super Series Quartz Cup 20mm - 3/4", 23mm - 15/16", 28mm - 1-1/10"
Head Gasket / Standard Heat Isolator / Quartz Heat Zone Isolator / Special Seal Ring
Spring Ring(D20, D23, D28)
Super Series Gas Lens Filter Kit 2.4mm - 2/32" (D20, D23, D28)
Long Back Cap, Medium Back Cap, Short Back Cap
Gas Lens Body Spring Ring Tool

T1SSAK_32	Super Series 3.2mm Accessory Kit	●	○	○	●	○	○	○	○

SUPER SERIES 3.2MM ACCESSORY KIT

Super Series Gas Lens Collet Body 3.2mm - 1/8" (D20, D23, D28)
Super Series Ceramic Cup 20mm - 3/4", 23mm - 15/16", 28mm - 1-1/10"
Super Series Quartz Cup 20mm - 3/4", 23mm - 15/16", 28mm - 1-1/10"
Head Gasket / Standard Heat Isolator / Quartz Heat Zone Isolator / Special Seal Ring
Spring Ring(D20, D23, D28)
Super Series Gas Lens Filter Kit 3.2mm - 1/8"" (D20, D23, D28)
Long Back Cap, Medium Back Cap, Short Back Cap
Gas Lens Body Spring Ring Tool

Super Series Accessory Kits

Part No.	Description	T1 / T1FX Series	T2 / T2FX	T3 / T3FX	T1W / T1WFX	T3W / T3WFX	T4W / T4WFX	T5W / T5WFX	T5WA
T2SSAK_16	Super Series 1.6mm Accessory Kit	○	●	○	○	●	●	○	○

SUPER SERIES 1.6MM ACCESSORY KIT

Super Series Gas Lens Collet Body 1.6mm - 1/16" (D20, D23, D28)
Super Series Ceramic Cup 20mm - 3/4", 23mm - 15/16", 28mm - 1-1/10"
Super Series Quartz Cup 20mm - 3/4", 23mm - 15/16", 28mm - 1-1/10"
Head Gasket / Standard Heat Isolator / Quartz Heat Zone Isolator / Special Seal Ring
Spring Ring(D20, D23, D28)
Super Series Gas Lens Filter Kit 1.6mm - 1/16" (D20, D23, D28)
Long Back Cap, Medium Back Cap, Short Back Cap
Gas Lens Body Spring Ring Tool

T2SSAK_24	Super Series 2.4mm Accessory Kit	○	●	○	○	●	●	○	○

SUPER SERIES 2.4MM ACCESSORY KIT

Super Series Gas Lens Collet Body 2.4mm - 2/32" (D20, D23, D28)
Super Series Ceramic Cup 20mm - 3/4", 23mm - 15/16", 28mm - 1-1/10"
Super Series Quartz Cup 20mm - 3/4", 23mm - 15/16", 28mm - 1-1/10"
Head Gasket / Standard Heat Isolator / Quartz Heat Zone Isolator / Special Seal Ring
Spring Ring(D20, D23, D28)
Super Series Gas Lens Filter Kit 2.4mm - 2/32" (D20, D23, D28)
Long Back Cap, Medium Back Cap, Short Back Cap
Gas Lens Body Spring Ring Tool

T2SSAK_32	Super Series 3.2mm Accessory Kit	○	●	○	○	●	●	○	○

SUPER SERIES 3.2MM ACCESSORY KIT

Super Series Gas Lens Collet Body 3.2mm - 1/8" (D20, D23, D28)
Super Series Ceramic Cup 20mm - 3/4", 23mm - 15/16", 28mm - 1-1/10"
Super Series Quartz Cup 20mm - 3/4", 23mm - 15/16", 28mm - 1-1/10"
Head Gasket / Standard Heat Isolator / Quartz Heat Zone Isolator / Special Seal Ring
Spring Ring(D20, D23, D28)
Super Series Gas Lens Filter Kit 3.2mm - 1/8"" (D20, D23, D28)
Long Back Cap, Medium Back Cap, Short Back Cap
Gas Lens Body Spring Ring Tool

Super Series Accessory Kits

Part No.	Description	T1 / T1FX Series	T2 / T2FX	T3 / T3FX	T1W / T1WFX	T3W / T3WFX	T4W / T4WFX	T5W / T5WFX	T5WA
T3SSAK_16	Super Series 1.6mm Accessory Kit	○	○	●	○	○	○	●	●

SUPER SERIES 1.6MM ACCESSORY KIT
Super Series Gas Lens Collet Body 1.6mm - 1/16" (D23, D28)
Super Series Ceramic Cup 23mm - 15/16", 28mm - 1-1/10"
Super Series Quartz Cup 23mm - 15/16", 28mm - 1-1/10"
Head Gasket / Standard Heat Isolator / Quartz Heat Zone Isolator / Special Seal Ring
Spring Ring(D23, D28)
Super Series Gas Lens Filter Kit 1.6mm - 1/16" (D23, D28)
Long Back Cap, Medium Back Cap, Short Back Cap
Gas Lens Body Spring Ring Tool

T3SSAK_24	Super Series 2.4mm Accessory Kit	○	○	●	○	○	○	●	●

SUPER SERIES 2.4MM ACCESSORY KIT
Super Series Gas Lens Collet Body 2.4mm - 2/32" (D23, D28)
Super Series Ceramic Cup 23mm - 15/16", 28mm - 1-1/10"
Super Series Quartz Cup 23mm - 15/16", 28mm - 1-1/10"
Head Gasket / Standard Heat Isolator / Quartz Heat Zone Isolator / Special Seal Ring
Spring Ring(D23, D28)
Super Series Gas Lens Filter Kit 2.4mm - 2/32" (D23, D28)
Long Back Cap, Medium Back Cap, Short Back Cap
Gas Lens Body Spring Ring Tool

T3SSAK_32	Super Series 3.2mm Accessory Kit	○	○	●	○	○	○	●	●

SUPER SERIES 3.2MM ACCESSORY KIT
Super Series Gas Lens Collet Body 3.2mm - 1/8" (D23, D28)
Super Series Ceramic Cup 23mm - 15/16", 28mm - 1-1/10"
Super Series Quartz Cup 23mm - 15/16", 28mm - 1-1/10"
Head Gasket / Standard Heat Isolator / Quartz Heat Zone Isolator / Special Seal Ring
Spring Ring(D23, D28)
Super Series Gas Lens Filter Kit 3.2mm - 1/8"" (D23, D28)
Long Back Cap, Medium Back Cap, Short Back Cap
Gas Lens Body Spring Ring Tool

RECOMMENDED TUNGSTEN PARAMATERS

Tungsten	Nozzle							Nozzle Bore	A / AC			A / DC	
	4	5	6	7	8	10	12		Pure	Ceriated	Lanthanated WLa10 WLa15 WLa20	Ceriated	Lanthanated WLa10 WLa15 WLa20
1.0mm	●	●	○	○	○	○	○	6.4mm 8.0mm	10A-60A	15A-70A	15A-100A	70A-80A	20A-100A
1.6mm	●	●	●	○	○	○	○	6.4mm 8.0mm 9.8mm	50A-100A	60-90A	70A-160A	80A-140A	80A-160A
2.4mm	○	○	●	●	●	○	○	9.8mm 11.2mm 12.7mm	100A-160A	90A-130A	110A-200A	150A-210A	120A-230A
3.2mm	○	○	○	●	●	○	○	11.2mm 12.7mm	130A-180A	140-190A	150A-205A	220A-320A	200A-305A
4.0mm	○	○	○	○	●	●	○	12.7mm 16.0mm	180A-260A	190A-250A	180A-260A	320A-450A	320A-450A
4.8mm	○	○	○	○	○	●	●	16.0mm 19.0mm	240A-350A	330A-460A	330A-460A	500A-675A	500A-675A
6.4mm	○	○	○	○	○	○	●	19.0mm	300A-450A	430A-575A	430A-575A	650A-950A	650A-950A

arc TORCHOLOGY
INTELLIGENT TORCH SOLUTIONS

MAKE WORK
LIFE EASIER

SAY HELLO

TO OUR VISION OF THE FUTURE

The design, manufacturing and quality systems of Arc Torchology are certified by **BVQI** in accordance with EN/ISO 9001:2015

ARCTORCHOLOGY.COM

ARC TIG HIGH PERFORMANCE SERIES

Make Work Life Easier

MPA004 / V.2024.08

arc TORCHOLOGY
INTELLIGENT TORCH SOLUTIONS

MAKE WORK
LIFE EASIER